MBE2658DE

AUS **User manual**
Microwave oven

USER MANUAL

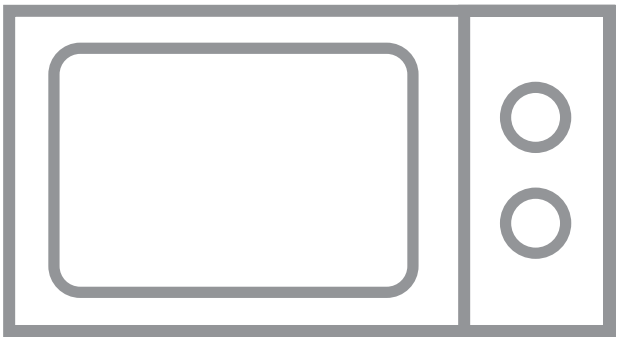

AEG

CONTENTS

1. SAFETY INFORMATION....3
2. INSTALLATION....7
3. PRODUCT DESCRIPTION....11
4. BEFORE FIRST USE....12
5. OPERATION....13
6. COOKING CHARTS....16
7. HINTS AND TIPS....22
8. TROUBLESHOOTING....24
9. TECHNICAL INFORMATION....25
10. ENERGY EFFICIENCY....25
11. ENVIRONMENT CONCERNS....25
12. WARRANTY....26

WE'RE THINKING OF YOU

Thank you for choosing this AEG product. We have created it to give you impeccable performance for many years, with innovative technologies that help make life simpler – features you might not find on ordinary appliances. Please spend a few minutes reading to get the very best from it.

Visit our website for:

Get usage advice, brochures, trouble shooter, service information:
www.aeg.com

Register your product for better service:
www.registeraeg.com

Buy Accessories, Consumables and Original spare parts for your appliance:
www.aeg.com/shop

CUSTOMER CARE AND SERVICE

We recommend the use of original spare parts.
When contacting Service, ensure that you have the following data available.
The information can be found on the rating plate. Model, PNC, Serial Number.

⚠ Warning/Caution-Safety information

ⓘ General information and tips

Environmental information

Subject to change without notice.

1. ⚠ SAFETY INFORMATION

This appliance can be used by children aged from 8 years and above and persons with reduced physical, sensory or mental capabilities or lack of experience and knowledge if they have been given supervision or instruction concerning use of the appliance in a safe way and understand the hazards involved. Children should be supervised to ensure that they do not play with the appliance. Cleaning and user maintenance shall not be made by children unless they are aged from 8 years and above and supervised.

This appliance is not intended for use at altitudes above 2000m.

⚠ **IMPORTANT!** IMPORTANT SAFETY INSTRUCTIONS: READ CAREFULLY AND KEEP FOR FUTURE REFERENCE.

⚠ **WARNING!**

Do not use the appliance without the turntable and turntable support. Do not use the appliance when empty.

⚠ **WARNING!**

If the door or door seals are damaged, the oven must not be operated until it has been repaired by a competent person.

⚠ **WARNING!**

It is hazardous for anyone other than a competent person to carry out any service or repair operation that involves the removal of a cover which gives protection against exposure to microwave energy.

⚠ **WARNING!**

Liquids and other foods must not be heated in sealed containers since they are liable to explode.

This appliance is intended to be used in household and similar applications such as: staff kitchen areas in shops, offices and other working environments; farm houses; by clients in hotels, motels and other residential environments; bed and breakfast type environments.

Only use microwave-safe containers and utensils.

Metallic containers for food and beverages are not allowed during microwave cooking.

Do not leave the oven unattended when using disposable plastic, paper or other combustible food containers.

The microwave oven is intended for heating food and beverages. Drying of food or clothing and heating of warming pads, slippers, sponges, damp cloth and similar may lead to risk of injury, ignition or fire.

If food being heated begins to smoke, DO NOT OPEN THE DOOR. Turn off and unplug the oven and wait until the food has stopped smoking. Opening the door while food is smoking may cause a fire.

Microwave heating of beverages can result in delayed eruptive boiling, therefore care has to be taken when handling the container.

The contents of feeding bottles and baby food jars shall be stirred or shaken and the temperature checked before consumption, in order to avoid burns.

Do not cook eggs in their shells and whole hard boiled eggs should not be heated in microwave ovens since they may explode even after microwave cooking has ended.

If the supply cord is damaged it must be replaced by the manufacturer, its service agent or similarly qualified persons in order to avoid a hazard.

1.1 Care and cleaning

Door:
To remove all trace of dirt, regularly clean both sides of the door, the door seals and sealing surfaces with a soft, damp cloth. Do not use harsh abrasive cleaners or sharp metal scrapers to clean the oven door glass since they can scratch the surface, which may result in shattering of the glass.

Oven interior:
For cleaning, wipe any splatters or spills with a soft damp cloth or sponge after each use while the oven is still warm. For heavier spills, use a mild soap and wipe several times with a damp cloth until all residues are removed. Do not remove the waveguide cover. Make sure that mild soap or water does not penetrate the small vents in the walls which may cause damage to the oven. Do not use spray type cleaners on the oven interior. Heat up your oven regularly by using the grill. Remaining food or fat splashed can cause smoke or a bad smell. Clean the waveguide cover, the oven cavity, the turntable and turntable support after use. These must be dry and free from grease. Built-up grease may overheat and begin to smoke or catch fire.

Oven exterior:
The outside of your oven can be cleaned easily with mild soap and water. Make sure the soap is wiped off with a moist cloth, and dry the exterior with a soft towel.

Control panel:
Open the door before cleaning to de-activate the control panel. Care should be taken when cleaning the control panel. Using a cloth dampened with water only, gently wipe the panel until it becomes clean. Avoid using excessive amounts of water. Do not use any sort of chemical or abrasive cleaner.

Turntable and turntable support:
Remove the turntable and turntable support from the oven. Wash the turntable and turntable support in mild soapy water. Dry with a soft cloth. Both the turntable and the turntable support are dishwasher safe.

Rack:
This should be washed in a mild washing up liquid solution and dried. The rack is dishwasher safe.

⚠ **IMPORTANT!**

Clean the oven at regular intervals and remove any food deposits. Failure to maintain the oven in a clean condition could lead to a deterioration of the surface that could adversely affect the life of the appliance and possibly result in a hazardous situation.

Care should be taken not to displace the turntable when removing containers from the appliance.

⚠ **IMPORTANT!**

A steam cleaner should not be used.

The microwave oven is intended to be used built-in.
The appliance must not be placed in a cabinet.
The appliance and its accessible parts become hot during use. Care should be taken to avoid touching heating elements.

⚠ **WARNING!**

Keep children away from the door and accessible parts that may become hot when the grill is in use. Children should be kept away to prevent them burning themselves.

⚠ **IMPORTANT!**

Do not use commercial oven cleaners, steam cleaners, abrasive, harsh cleaners, any that contain sodium hydroxide or scouring pads on any part of your microwave oven.

2. INSTALLATION

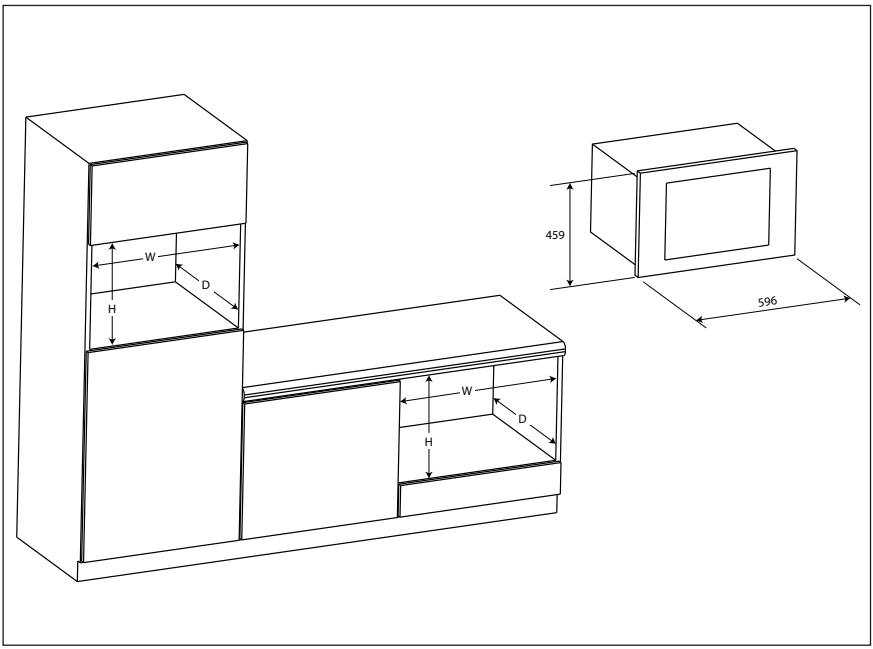

The microwave can be fitted in position A or B:

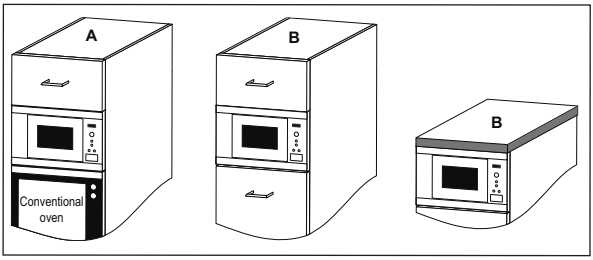

Position	Niche size W D H
A	562 x 550 x 450
B	562 x 500 x 450

Measurements in (mm)

2.1 Installing the appliance

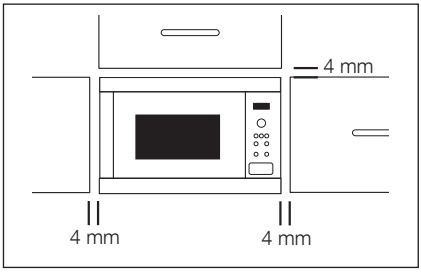

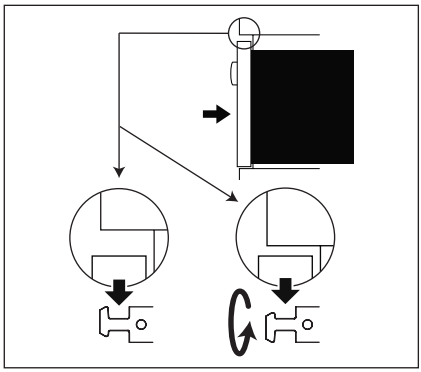

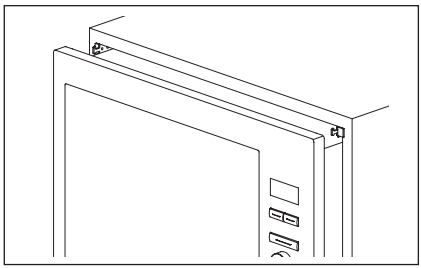

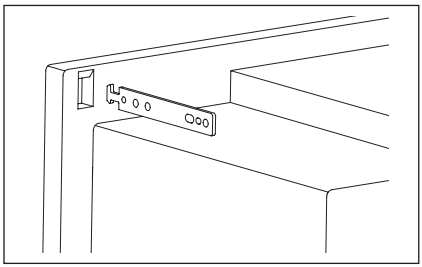

1. Remove all packaging and check carefully for any signs of damage.
2. Fit the fixing hooks to the kitchen cupboard using the instruction sheet and template supplied.
3. Fit the appliance into the kitchen cupboard slowly, and without force. The appliance should be lifted onto the fixing hooks and then lowered into place. In the case of interference during fitting, this hook is reversible. The front frame of the oven should seal against the front opening of the cupboard.
4. Ensure the appliance is stable and not leaning. Ensure that a 4 mm gap is kept between the cupboard door above and the top of the frame (see diagram).

2.2 Connecting the appliance to the power supply

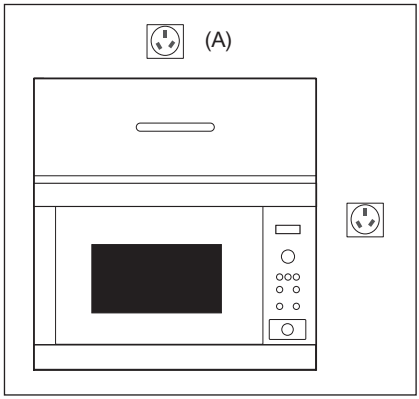

- The electrical outlet should be readily accessible so that the unit can be unplugged easily in an emergency. Or it should be possible to isolate the oven from the supply by incorporating a switch in the fixed wiring in accordance with the wiring rules.
- The power supply cord may only be replaced by an electrician.
- If the supply cord is damaged it must be replaced by the manufacturer, its service agent or similarly qualified persons in order to avoid a hazard.
- The socket should not be positioned behind the cupboard.
- The best position is above the cupboard, see (A).
- Connect the appliance to a single phase 220-240 V/50 Hz alternating current via a correctly rated earth socket.
- If the appliance is to be operated in a non-European country, the supply voltage, current type and frequency of the appliance indicated on the rating plate must correspond with the specification of your power supply. The rating plate can be found on the inside face of the control panel.
- Before installing, tie a piece of string to the power supply cord to facilitate connection to point (A) when the appliance is being installed.
- When inserting the appliance into the high-sided cupboard, DO NOT crush the power supply cord.
- Do not immerse the power supply cord or plug in water or any other liquid.
- Do not allow the power supply cord to run over any hot or sharp surfaces, such as the hot air vent area at the top rear of the oven.

2.3 Additional advice

Do not use the microwave oven to heat oil for deep frying. The temperature cannot be controlled and the oil may catch fire. To make popcorn, only use special microwave popcorn makers.

Individuals with PACEMAKERS should check with their doctor or the manufacturer of the pacemaker for precautions regarding microwave ovens.

Never spill or insert any objects into the door lock openings or ventilation openings. In the event of a spill, turn off and unplug the oven immediately and call an authorised ELECTROLUX service agent.

Never modify the oven in any way.

Only use the turntable and the turntable support designed for this oven. Do not operate the oven without the turntable.

To prevent the turntable from breaking:

- Before cleaning the turntable with water, leave the turntable to cool.
- Do not put hot foods or hot utensils on a cold turntable.
- Do not put cold foods or cold utensils on a hot turntable.

Do not use plastic containers for microwaving if the oven is still hot from using the GRILL mode and DUAL GRILL mode because they may melt. Plastic containers must not be used during above modes unless the container manufacturer says they are suitable.

Neither the manufacturer nor the dealer can accept any liability for damage to the oven or personal injury resulting from failure to observe the correct electrical connection procedure. Water vapour or drops may occasionally form on the oven walls or around the door seals and sealing surfaces. This is a normal occurrence and is not an indication of microwave leakage or a malfunction.

Concerning the lamp(s) inside this product and spare part lamps sold separately: These lamps are intended to withstand extreme physical conditions in household appliances, such as temperature, vibration, humidity, or are intended to signal information about the operational status of the appliance. They are not intended to be used in other applications and are not suitable for household room illumination.

3. PRODUCT DESCRIPTION

3.1 Microwave oven

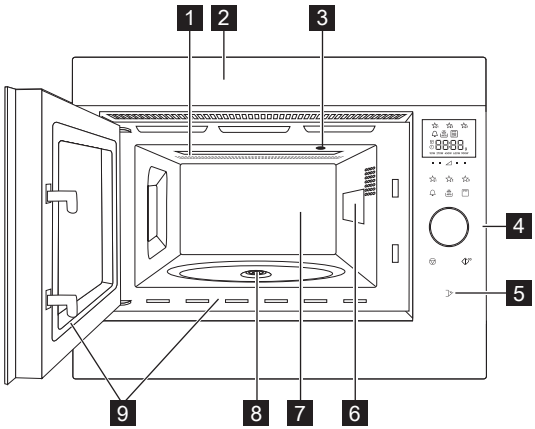

1 Grill heating element
2 Front trim
3 Oven light
4 Control panel
5 Door open key
6 Waveguide cover (do not remove)
7 Oven cavity
8 Seal
9 Door seals and sealing surfaces

3.2 Accessories

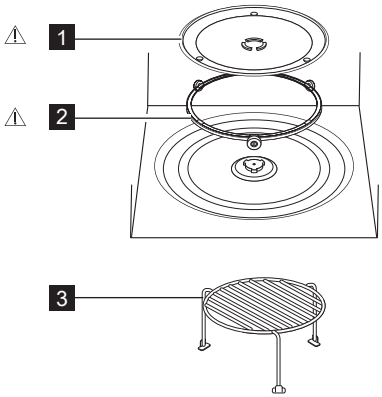

Check to make sure the following accessories are provided:

1 Turntable
2 Turntable support
3 Rack

- Place the turntable support on the floor of the cavity.
- Then place the turntable on the turntable support.
- To avoid turntable damage, ensure dishes or containers are lifted clear of the turntable rim when removing them from the oven.

When you order accessories, please mention two items: part name and model name to your dealer or an authorised ELECTROLUX service agent.

WARNING!

Do not operate the microwave oven without these parts fitted.

3.3 Control panel

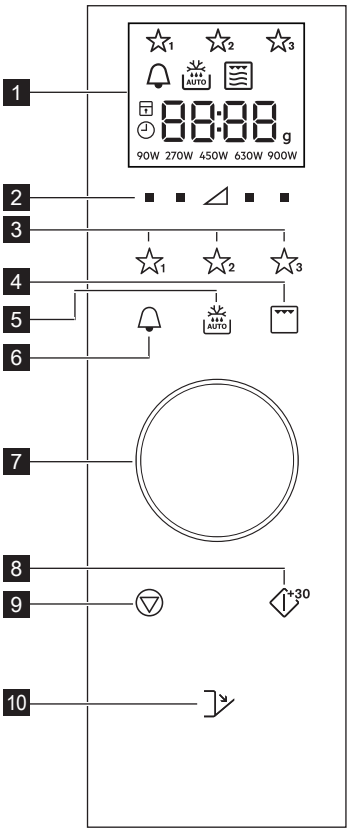

1 Digital display indicators:

- Favourites
- Kitchen timer
- Auto defrost
- Grill
- Dual grill
- Microwave
- Stop/Cancel
- Child safety lock
- Set clock
- Display segments
- Weight
- Power levels (90W 270W 450W 630W 900W)

2 Power level keys
3 Favourites keys
4 Grill key
5 Auto defrost key
6 Kitchen timer key
7 Timer/Weight knob
8 Start/Confirm/ Quick start key
9 Stop key
10 Door open key

4. BEFORE FIRST USE

4.1 Plug in

When the oven is plugged in for the first time you have the option of setting the clock. The oven has a 24hr clock.

1. The oven will beep and all of the display icons will be switched on for half a second.
Use the knob to select clock 'on' or clock 'oFF'.

2a. To turn the clock off, turn the knob until the display shows 'oFF', then press the **START** key. The oven is ready to use.

If you have turned the clock off and want to turn it back on, press the **KITCHEN TIMER** key twice and follow 2b.

2b. To turn the clock on, turn the knob until the display shows 'on', then press the **START** key.

Example: To set the clock to 18:45.

1. Rotate the knob to adjust the hour.
2. Press the **START** key to confirm.
3. Rotate the knob to adjust the minutes.
4. Press the **START** key to confirm.

When the clock is set the time of day will be shown in the display.

4.2 Standby (Economy mode)

The oven will automatically enter standby mode if it is not used within a 5 min period.
Example: If the clock has not been set:
The display will switch off.
To exit standby mode open the door, press any key or rotate the knob.
Example: If the clock has been set:
After the 5 minute period, the time will be displayed.

4.3 Adjusting the clock when set

You can adjust the clock after the time has been set.
Example: To change from 18.45 to 19.50.
1. Press the **KITCHEN TIMER** key twice.
2. Press the **START** key.
3. Rotate the knob till '19' is displayed.
4. Press the **START** key.
5. Rotate the knob till '50' is displayed.
6. Press the **START** key.

4.4 To cancel the clock and set standby (Economy mode)

1. Press the **KITCHEN TIMER** key twice.
2. Rotate the knob until 'oFF' is displayed.
3. Press the **START** key to confirm.

4.5 Child safety lock

The oven has a safety feature which prevents the accidental running of the oven by a child. When the lock has been set, no part of the microwave will operate until the lock feature has been turned off.
Switching the lock on or off is only possible when the oven is not running.
Example: To switch the lock on.
Press and hold the **STOP** key until the 'child lock' symbol switches on.
Example: To switch the lock off.
Press and hold the **STOP** key until the 'child lock' symbol switches off.

When child lock is switched on, all keys are disabled except the **STOP** key.

5. OPERATION

5.1 Microwave cooking

Example: To heat soup for 2 minutes and 30 seconds on 630 W microwave power.
1. Press the **POWER LEVEL** key to the right of the triangle until '630 W' is displayed.
2. Rotate the knob to enter the time.
3. Press the **START** key.

In microwave cooking mode, you can adjust the power level of the oven by pressing the key directly below the required setting.

You can change the power level when the oven is running by pressing and holding the required **POWER LEVEL** key until the new power setting is highlighted on the display. Power levels that are too high or cooking times that are too long may overheat foods resulting in a fire.

If 900 W is selected then the maximum microwave time that can be input is 15 minutes.

If the oven runs in any mode for 3 minutes or longer, the fan will stay on for 2 minutes after the cooking ends. Open the door and it will stop, close the door it will start again until 2 minutes is finished (including door open time). If the oven runs for less than 3 minutes the fan will not come on.

After cooking the turntable will continue to rotate until the cooking vessel returns to its initial start position. The cavity light will remain on until completion of the rotation, or for 5 seconds (whichever is greater). The oven will beep when complete. If the door is opened during this process, the rotation will stop.

5.2 Power levels

Power setting	Suggested use
900 W/HIGH	Used for fast cooking or reheating (e.g. soup, casseroles, canned food, hot beverages, vegetables, fish).
630 W	Used for longer cooking of dense foods such as roast joints, meat loaf and plated meals, also for sensitive dishes such as cheese sauce and sponge cakes. At this reduced setting, the sauce will not boil over and food will cook evenly without over cooking at the sides.
450 W	For dense foods which require a long cooking time when cooked conventionally (e.g. beef dishes) it is advisable to use this power setting to ensure the meat will be tender.
270 W/ DEFROST	To defrost, select this power setting, to ensure that the dish defrosts evenly. This setting is also ideal for simmering rice, pasta, dumplings and cooking egg custard.
90 W	For gentle defrosting (e.g. cream gateaux or pastry).
0 W	For standing/kitchen timer.

W = WATT

5.3 Reduced power level

Cooking mode	Standard time	Reduced power level
Microwave 900 W	15 minutes	Microwave 630 W
Grill	10 minutes	Grill 500 W
Dual Grill	10 minutes	Grill 500 W

5.4 Adjusting the cooking time during cooking

You can adjust the cooking time during cooking.
Example: To add 2 minutes (120 seconds) using the **START** key.

1. Press the **START** key four times. The cooking time will increase by 120 seconds.

5.5 Using the stop key

Press the **STOP** key once to enter Pause mode.
Press the **STOP** key again to cancel the cooking time.

5.6 Kitchen timer

To set the kitchen timer.

1. Press the **KITCHEN TIMER** key.
2. Rotate the knob to enter the time.
3. Press the **START** key. The timer will automatically start.

The time can be extended when the timer is running by rotating the knob or pressing the **START** key.
The timer function can only be used when the oven is not running.

5.7 Quick start

You can directly start cooking on 900 W/HIGH for 30 seconds by pressing the **START** key.

To add more time press the **START** key.

5.8 Mute

To turn the sound off.

1. Press the **KITCHEN TIMER** key 3 times until ‘Soun’ is displayed.
2. Rotate the knob until ‘oFF’ is displayed.
3. Press the **START** key.

To turn the sound on.

1. Press the **KITCHEN TIMER** key 3 times until ‘Soun’ is displayed.

2. Rotate the knob until ‘on’ is displayed.
3. Press the **START** key.

5.9 Pause

To pause whilst the microwave is running.
1. Press the **STOP** key or open the door.
2. The oven will pause for up to 5 minutes.
3. Press **START** to continue cooking.

5.10 Grill and dual grill

This microwave oven has two grill cooking modes:

Grill only
Dual grill (grill with microwave)

IMPORTANT! The rack is recommended for grilling.
You may detect smoke or a burning smell when using the grill for the first time, this is normal and does not indicate a fault with the oven. To avoid this problem, when using the grill for the first time, operate the grill without food for 20 minutes.

1. Rotate the knob to enter the cooking time.
2. Press the **GRILL** key once for Dual Grill mode (Grill + Microwave) and press the **START** key.
   Press the **GRILL** key again to select Grill only mode.
3. Press the **START** key.

In Dual Grill mode the 90 W and 900 W microwave power levels are not available.
To exit Dual Grill or Grill mode press the **GRILL** key until the microwave only symbol is illuminated on the display.

5.11 Favourites

The oven has 3 Favourite recipes.

☆1 Soften Butter
☆2 Melt Chocolate
☆3 Mug Cake

Example: To soften butter.
1. Press the **FAVOURITE 1** key once.
2. Rotate the knob to enter the weight.
3. Press the **START** key.

If display segments exhibit a rotating pattern this indicates that the food needs to be stirred or turned over.
To continue cooking, press the **START** key. At the end of the auto defrost time, the programme will automatically stop.
The power levels for the pre-set Favourite recipes cannot be adjusted.
1-4 Mug cakes can be cooked.

WARNING! Chocolate may become very hot! If the chocolate needs longer cooking time then add 10 seconds. Take care with chocolate as it may overheat and burn.

To overwrite Favourites for your own recipes.
1. Press the **POWER LEVEL** key to select the power.
2. Rotate knob to enter the required cooking time.
3. Press and hold the **FAVOURITE** key you want to set until you hear a single beep and the favourite star is visible.

To re-set Favourites to the factory settings.
1. Press the **STOP** key.
2. Press and hold **POWER LEVEL** 450 W for 3 seconds.
   The oven will reset Favourites to the factory settings.

5.12 Auto defrost

Auto defrost automatically works out the correct cooking mode and cooking time based on the weight of the food.

You can choose from 2 auto defrost menus.
1. Auto Defrost: Meat/Fish/Poultry
2. Auto Defrost: Bread

Example: To defrost 0.2 kg steak.
1. Select the auto defrost menu by pressing the **AUTO DEFROST** key once.
2. Rotate the knob to select the weight.
3. Press the **START** key.

If display segments exhibit a rotating pattern this indicates that the food needs to be stirred or turned over.
To continue cooking, press the **START** key. At the end of the auto defrost time, the programme will automatically stop.
Time/Power adjustment is not available in auto defrost.

6. COOKING CHARTS

6.1 Favourites

Favourites	Weight	Key	Procedure
Soften Butter	0.05-0.25 kg	☆1	• Place the butter into a pyrex dish. Stir well after cooking.
Melt Chocolate	0.1-0.2 kg	☆2	• Break up the chocolate into small pieces. Place the chocolate into a pyrex dish. Stir when audible bell sounds. Stir well after cooking. ⚠ **WARNING:** Chocolate may become very hot! If the chocolate needs longer then add 10 seconds cooking time. Take care with chocolate as it may overheat and burn.
Mug Cake	1-4 mugs	☆3	• Make the cake as the recipe. Place the mug towards the edge of the turntable. Stand for 30 seconds after cooking.

6.2 Mug cake recipes

Rich Chocolate Mug Cake	
Ingredients for 1 Mug:	
2½ tbsp (25 g)	Plain Flour
2 tbsp (12 g)	Cocoa Powder
2½ tbsp (30 g)	Castor Sugar
¼ tsp	Baking Powder
1½ tbsp (15 g)	Vegetable Oil
¼ tsp	Vanilla Extract
1	Medium Egg

Method:

1. Put all of the dry ingredients into a mug, mix well with a fork.
2. Add the vegetable oil, vanilla extract and egg, mix well.
3. Place the mug off centre on the turntable.
4. Cook using ☆3. The cake will rise out of the mug during cooking.

After cooking, stand for 30 seconds.

Decorate with a swirl of chocolate buttercream.
Tip: To make Chocolate Orange Mug Cake replace the vanilla extract with ½ tsp orange extract.

Raspberry Ripple Mug Cake	
Ingredients for 1 Mug:	
2½ tbsp (25 g)	Plain Flour
2½ tbsp (30 g)	Castor Sugar
¼ tsp	Baking Powder
1½ tbsp (15 g)	Vegetable Oil
½ tsp	Vanilla Extract
1	Medium Egg
1½ tbsp	Seedless Raspberry Jam

Method:

1. Put all of the dry ingredients into a mug, mix well with a fork.
2. Add the vegetable oil, vanilla extract and egg, mix well.
3. Fold in the jam using a spoon so that it streaks the mixture.
4. Place the mug off centre on the turntable.
5. Cook using ☆3. The cake will rise out of the mug during cooking.

After cooking, stand for 30 seconds.

Decorate with a swirl of vanilla buttercream.

Apple Crumble Mug Cake	
Ingredients for 1 Mug:	
2½ tbsp (25 g)	Plain Flour
2 tbsp (30 g)	Soft Brown Sugar
¼ tsp	Baking Powder
¼ tsp	Ground Cinnamon
1½ tbsp (15 g)	Vegetable Oil
1	Medium Egg
1½ tbsp (30 g)	Apple Sauce
half (7 g)	Digestive Biscuit, crushed

Method:

1. Put all of the dry ingredients (except for the biscuit) into a mug, mix well with a fork.
2. Add the vegetable oil and egg, mix well.
3. Gently fold in the apple sauce using a spoon so that it streaks the mixture.
4. Top with the crushed digestive biscuit.
5. Place the mug off centre on the turntable.
6. Cook using ☆₃. The cake will rise out of the mug during cooking.

After cooking, stand for 30 seconds.

Top with a scoop of vanilla ice cream.

⚠ **WARNING!** The apple sauce will be hot.

Peanut Butter Mug Cake	
Ingredients for 1 Mug:	
2½ tbsp (25 g)	Plain Flour
2 tbsp (30 g)	Soft Brown Sugar
¼ tsp	Baking Powder
1½ tbsp (15 g)	Vegetable Oil
¼ tsp	Vanilla Extract
2 tbsp (30 g)	Smooth Peanut Butter
1	Medium Egg

Method:

1. Put all of the dry ingredients into a mug, mix well with a fork.
2. Add the vegetable oil, vanilla extract, peanut butter, and egg mix well.
3. Place the mug off centre on the turntable.
4. Cook using ☆₃. The cake will rise out of the mug during cooking.

After cooking, stand for 30 seconds.

Top with chocolate spread.
Tip: Use crunchy peanut butter if you prefer.

Lemon Drizzle Mug Cake	
Ingredients for 1 Mug:	
2½ tbsp (25 g)	Plain Flour
2½ tbsp (30 g)	Castor Sugar
¼ tsp	Baking Powder
1½ tbsp (15 g)	Vegetable Oil
1 tsp	Lemon Zest
1	Medium Egg
Topping:	1 tbsp Lemon Juice mixed with 2 tbsp Castor Sugar

Method:

1. Put all of the dry ingredients into a mug, mix well with a fork.
2. Add the vegetable oil, lemon zest and egg, mix well.
3. Place the mug off centre on the turntable.
4. Cook using ☆₃. The cake will rise out of the mug during cooking.
5. Make the drizzle topping by mixing the lemon juice with the castor sugar.
6. After cooking, loosen the cake, pierce the top all over with a skewer, then drizzle the topping over the cake, stand for 30 seconds.

Carrot Mug Cake	
Ingredients for 1 Mug:	
2 tbsp (20 g)	Plain Flour
2½ tbsp (30 g)	Light Brown Sugar
¼ tsp	Baking Powder
¼ tsp	Ground Cinnamon
¼ tsp	Ground Nutmeg
1 tbsp	Ground Almonds
1½ tbsp (15 g)	Sunflower Oil
	zest from ½ Orange
30 g	Grated Carrot
1	Medium Egg
Cream Topping:	15 g Butter, Softened 40 g Icing Sugar 40 g Full-fat Cream Cheese ½ tsp Orange Juice

Method:

1. Put all of the dry ingredients into a mug, mix well with a fork.
2. Add the sunflower oil, orange zest, grated carrot and egg, mix well.
3. Place the mug off centre on the turntable.
4. Cook using ☆₃. The cake will rise out of the mug during cooking.
5. Make the topping by mixing the butter, icing sugar, cream cheese and orange juice together.

After cooking, stand for 30 seconds.

Allow the cake to cool, then add the topping.

6.3 Auto defrost

Auto defrost	Weight	Key	Procedure
Meat/fish/poultry (Whole fish, fish steaks, fish fillets, chicken legs, chicken breast, minced meat, steak, chops, burgers, sausages)	0.2-1.0 kg	AUTO x1	• Place the food in a flan dish in the centre of the turntable. • When the audible bell sounds, turn the food over, rearrange and separate. Shield thin parts and warm spots with aluminium foil. • After defrosting, wrap in aluminium foil for 15-45 min, until thoroughly defrosted. • Minced meat: When the audible bell sounds, turn the food over. Remove the defrosted parts if possible. ⓘ Not suitable for whole poultry.
Bread	0.1-1.0 kg	AUTO x2	• Distribute in a flan dish in the centre of the turntable. For 1.0 kg, distribute directly on the turntable. • When the audible bell sounds, turn over, rearrange and remove defrosted slices. • After defrosting cover in aluminium foil and stand for 5-15 min until thoroughly defrosted.

ⓘ Enter the weight of the food only. Do not include the weight of the container.
For food weighing more or less than weights/quantities given in the chart, use manual operation.
The final temperature will vary according to the initial temperature.
Steaks and chops should be frozen in one layer.
Minced meat should be frozen in a thin shape.

6.4 Heating food and drink

Food/drink		Quantity -g/ml-	Setting	Power Level	Time -Min-	Method
Milk,	1 cup	150	Micro	900 W	1	do not cover
Water,	1 cup	150	Micro	900 W	2	do not cover
	6 cups	900	Micro	900 W	8-10	do not cover
	1 bowl	1000	Micro	900 W	9-11	do not cover
One plate meal		400	Micro	900 W	4-6	cover, stir halfway through cooking
Soup/stew		200	Micro	900 W	1-2	cover, stir after heating
Vegetables		500	Micro	900 W	3-5	cover, stir halfway through cooking
Meat, 1 slice[1)]		200	Micro	900 W	3	thinly spread sauce over the top, cover
Fish fillet[1)]		200	Micro	900 W	3-5	cover
Cake, 1 slice		150	Micro	450 W	½-1	place in a flan dish
Baby food, 1 jar		190	Micro	450 W	½-1	transfer into a suitable microwaveable container, after heating stir well and test the temperature
Melting margarine or butter[1)]		50	Micro	900 W	½	cover
Melting chocolate		100	Micro	450 W	3-4	stir occasionally

[1)]from chilled

6.5 Defrosting

Food	Quantity -g-	Setting	Power Level	Time -Min-	Method	Standing time -Min-
Goulash	500	Micro	270 W	8-9	stir halfway through defrosting	10-30
Cake, 1 slice	150	Micro	90 W	1-3	place in a flan dish	5
Fruit	250	Micro	270 W	3-5	spread out evenly, turn over halfway through defrosting	5

6.6 Cooking from frozen

Food	Quantity -g-	Setting	Power Level	Time -Min-	Method	Standing time -Min-
Fish fillet	300	Micro	900 W	9-11	cover	2
One plate meal	400	Micro	900 W	8-10	cover, stir after 6 minutes	2

6.7 Cooking and grilling

Food	Quantity -g-	Setting	Power Level	Time -Min-	Method	Standing time -Min-
Broccoli/ Peas	500	Micro	900 W	6-8	add 4-5 tbsps water, cover, stir halfway through cooking	-
Carrots	500	Micro	900 W	9-11	cut into rings, add 4-5 tbsps water, cover, stir halfway through cooking	-
Roasts	1000	Micro Dual Grill Micro Grill	450 W 450 W 450 W	16-17 9-10[1)] 9-10 9-10	season to taste, place on the turntable, turn over after[1)]	10
Rump steaks 2 pieces	400	Grill Grill		10-11[1)] 10-11	place on the rack, turn over after[1)], season after grilling	
Browning of gratin dishes		Grill		12-15	place dish on the rack	
Cheese toastie	1 piece	Grill Grill	450 W	4-5[1)] 3-4[2)]	place 2 slices of bread on the rack, cover one slice with cheese, cook[1)], place toasted slice on top of the cheese on toast, turnover and cook[2)]	
Frozen pizza	400	Micro Dual Grill	450 W 450 W	4-5[1)] 5-6[2)]	place on the turntable[1)] place dish on the rack[2)]	

If the oven runs in any mode for 3 minutes or longer, the fan will stay on for 2 minutes after the cooking ends. Open the door and it will stop, close the door it will start again until 2 minutes is finished (including door open time). If the oven runs for less than 3 minutes the fan will not come on.

7. HINTS AND TIPS

7.1 Microwave safe cookware

Cookware	Microwave safe	Comments
Aluminium foil/ containers	✓ / ✗	Small pieces of aluminium foil can be used to shield food from overheating. Keep foil at least 2 cm from the oven walls, as arcing may occur. Foil containers are not recommended unless specified by the manufacturer. Follow instructions carefully.
China and ceramics	✓ / ✗	Porcelain, pottery, glazed earthenware and bone china are usually suitable, except for those with metallic decoration.
Glassware e.g. Pyrex ®	✓	Care should be taken if using fine glassware as it can break or crack if heated suddenly.
Metal	✗	It is not recommended to use metal cookware when using microwave power as it will arc, which can lead to fire.
Plastic/polystyrene e.g. fast food containers	✓	Care must be taken as some containers warp, melt or discolour at high temperatures.
Freezer/roasting bags	✓	Must be pierced to let steam escape. Ensure bags are suitable for microwave use. Do not use plastic or metal ties, as they may melt or catch fire due to the metal arcing.
Paper-plates, cups and kitchen paper	✓	Only use for warming or to absorb moisture. Care must be taken as overheating may cause fire.
Straw and wooden containers	✓	Always attend the oven when using these materials as overheating may cause fire.
Recycled paper and newspaper	✗	May contain extracts of metal which will cause arcing and may lead to fire.

7.2 Microwave cooking advice

	Microwave cooking advice
Composition	Foods high in fat or sugar (e.g. Christmas pudding, mince pies) require less heating time. Care should be taken as overheating can lead to fire.
Size	For even cooking make all the pieces the same size.
Temperature of food	The initial temperature of food affects the amount of cooking time needed. Cut into foods with fillings (e.g. jam doughnuts) to release heat or steam.
Arrange	Place the thickest parts of food towards the outside of the dish (e.g. chicken drumsticks).
Cover	Use vented microwave cling film or a suitable lid.
Pierce	Foods with a shell, skin or membrane must be pierced in several places before cooking or reheating as steam will build up and may cause food to explode (e.g. potatoes, fish, chicken, sausages). ⚠ **IMPORTANT!** Eggs should not be heated using microwave power as they may explode, even after cooking has ended (e.g. poached, hard boiled).
Stir, turn and rearrange	For even cooking it is essential to stir, turn and rearrange food during cooking. Always stir and rearrange from the outside towards the centre.
Stand	Standing time is necessary after cooking to enable the heat to disperse equally throughout the food.
Shield	Warm areas can be shielded with small pieces of foil, which reflect microwaves (e.g. legs and wings on a chicken).

ⓘ Use pot holders or oven gloves when removing food from the oven to prevent burns. Always open containers, popcorn makers, oven cooking bags, etc., away from the face and hands to avoid steam burns.
Always stand back from the oven door when opening to avoid burns from escaping steam and heat.
Slice stuffed baked foods after heating to release steam and avoid burns.

8. TROUBLESHOOTING

Problem	Check if . . .
The microwave appliance is not working properly?	• The fuses in the fuse box are working. • There has not been a power outage. • If the fuses continue to blow, please contact a qualified electrician.
The microwave mode is not working?	• The door is properly closed. • The door seals and their surfaces are clean. • The **START** key has been pressed.
The turntable is not turning?	• The turntable support is correctly connected to the drive. • The ovenware does not extend beyond the turntable. • Food does not extend beyond the edge of the turntable preventing it from rotating. • There is nothing in the well beneath the turntable.
The microwave will not switch off?	• Isolate the appliance from the fuse box. • Call an authorised ELECTROLUX service agent.
The interior light is not working?	• Call your authorised ELECTROLUX service agent. The interior light can be exchanged only by a trained authorised ELECTROLUX service agent.
The food is taking longer to heat through and cook than before?	• Set a longer cooking time (double quantity = nearly double time) or • If the food is colder than usual, rotate or turn from time to time or • Set a higher power setting.
The door will not open due to power cut?	• Open the door carefully by pulling outward at the bottom right hand corner of the door glass.

9. TECHNICAL INFORMATION

AC Line Voltage		220-240 V, 50 Hz, single phase
AC Power required:	Microwave	1.4 kW
	Grill	0.85 kW
	Microwave/Grill	2.20 kW
Output power:	Microwave	900 W (IEC 60705)
	Grill	800 W
Microwave Frequency		2450 MHz[1] (Group 2/Class B)
Outside Dimensions:	MBE2658DE	596 mm (W) x 459 mm (H) x 404 mm (D)
Cavity Dimensions		342 mm (W) x 207 mm (H) x 368 mm (D)[2]
Oven Capacity		26 litres[2]
Turntable		ø 325 mm, glass
Weight		approx. 19.5 kg

[1] This Product fulfils the requirement of the European standard EN55011.
In conformity with this standard, this product is classified as group 2 class B equipment.
Group 2 means that the equipment intentionally generates radio-frequency energy in the form of electromagnetic radiation for the heat treatment of food.
Class B equipment means that the equipment is suitable to be used in domestic establishments.

[2] Internal capacity is calculated by measuring maximum width, depth and height.
Actual capacity for holding food is less.

10. ENERGY EFFICIENCY

Product information for power consumption and maximum time to reach applicable low power mode

Power consumption in standby with display on	0.8 W
Power consumption in standby with display off	0.5 W
Maximum time needed for the equipment to automatically reach the applicable low power mode	5 min

11. ENVIRONMENT CONCERNS

This product contains a light source of energy efficiency class F.

Recycle materials with the symbol ♺. Put the packaging in applicable containers to recycle it.

Help protect the environment and human health and recycle waste electrical and electronic appliances.



Do not dispose of appliances marked with the symbol with household waste. Return the product to your local recycling facility or contact your municipal office.

12. WARRANTY

AEG Warranty

FOR SALES IN AUSTRALIA AND NEW ZEALAND
ALL AEG BRANDED APPLIANCES

This document sets out the terms and conditions of the product warranties for AEG Appliances. It is an important document. Please keep it with your proof of purchase documents in a safe place for future reference should there be a manufacturing defect in your Appliance. This warranty is in addition to other rights you may have under the Australian Consumer Law.

1. **In this warranty:**
   (a) 'ACL' or 'Australian Consumer Law' means Schedule 2 to the Competition and Consumer Act 2010;
   (b) 'Appliance' means any Electrolux product purchased by you and accompanied by this document;
   (c) 'ASC' means Electrolux's authorised serviced centres;
   (d) 'AEG' is the brand controlled by Electrolux Home Products Pty Ltd of 163 O'Riordan Street, Mascot NSW 2020, ABN 51 004 762 341 in respect of Appliances purchased in Australia and Electrolux (NZ) Limited (collectively "Electrolux") of 3-5 Niall Burgess Road, Mount Wellington, in respect of Appliances purchased in New Zealand;
   (e) 'Warranty Period' means the period specified in clause 3 of this warranty;
   (f) 'you' means the purchaser of the Appliance not having purchased the Appliance for re-sale, and 'your' has a corresponding meaning.
2. **Application:** This warranty only applies to new Appliances, purchased and used in Australia or New Zealand and is in addition to (and does not exclude, restrict, or modify in any way) other rights and remedies under a law to which the Appliances or services relate, including any non-excludable statutory guarantees in Australia and New Zealand.
3. **Warranty Period:** Subject to these terms and conditions, this warranty continues for in Australia for a period of 60 months and in New Zealand for a period of 60 months, following the date of original purchase of the Appliance.
4. **Repair or replace warranty:** During the Warranty Period, Electrolux or its ASC will, at no extra charge if your Appliance is readily accessible for service, without special equipment and subject to these terms and conditions, repair or replace any parts which it considers to be defective. Electrolux may, in its absolute discretion, choose whether the remedy offered for a valid warranty claim is repair or replacement. Electrolux or its ASC may use refurbished parts to repair your Appliance. You agree that any replaced Appliances or parts become the property of Electrolux.
5. **Travel and transportation costs:** Subject to clause 7, Electrolux will bear the reasonable cost of transportation, travel and delivery of the Appliance to and from Electrolux or its ASC. Travel and transportation will be arranged by Electrolux as part of any valid warranty claim.
6. **Proof of purchase** is required before you can make a claim under this warranty.
7. **Exclusions:** You may not make a claim under this warranty unless the defect claimed is due to faulty or defective parts or workmanship. This warranty does not cover:
   (a) light globes, batteries, filters or similar perishable parts;
   (b) parts and Appliances not supplied by Electrolux;
   (c) cosmetic damage which does not affect the operation of the Appliance;
   (d) damage to the Appliance caused by:
      (i) negligence or accident;
      (ii) misuse or abuse, including failure to properly maintain or service;
      (iii) improper, negligent or faulty servicing or repair works done by anyone other than an Electrolux authorised repairer or ASC;
      (iv) normal wear and tear;
      (v) power surges, electrical storm damage or incorrect power supply;
      (vi) incomplete or improper installation;
      (vii) incorrect, improper or inappropriate operation;
      (viii) insect or vermin infestation;
      (ix) failure to comply with any additional instructions supplied with the Appliance;

   In addition, Electrolux is not liable under this warranty if:
   (a) the Appliance has been, or Electrolux reasonably believes that the Appliance has been, used for purposes other than those for which the Appliance was intended, including where the Appliance has been used for any non-domestic purpose;
   (b) the Appliance is modified without authority from Electrolux in writing;
   (c) the Appliance's serial number or warranty seal has been removed or defaced.
8. **How to claim under this warranty:** To enquire about claiming under this warranty, please follow these steps:
   (a) carefully check the operating instructions, user manual and the terms of this warranty;
   (b) have the model and serial number of the Appliance available;
   (c) have the proof of purchase (e.g. an invoice) available;
   (d) telephone the numbers shown below.
9. **Australia:** For Appliances and services provided by Electrolux in Australia: Electrolux goods come with guarantees that cannot be excluded under the Australian Consumer Law. You are entitled to a replacement or refund for a major failure and for compensation for any other reasonably foreseeable loss or damage. You are also entitled to have the Appliance repaired or replaced if the Appliance fails to be of acceptable quality and the failure does not amount to a major failure. 'Acceptable quality' and 'major failure' have the same meaning as referred to in the ACL.
10. **New Zealand:** For Appliances and services provided by Electrolux in New Zealand, the Appliances come with a guarantee by Electrolux pursuant to the provisions of the Consumer Guarantees Act, the Sale of Goods Act and the Fair Trading Act. Where the Appliance was purchased in New Zealand for commercial purposes the Consumer Guarantee Act does not apply.
11. **Confidentiality:** You accept that if you make a warranty claim, Electrolux and its agents including ASC may exchange information in relation to you to enable Electrolux to meet its obligations under this warranty.

Important Notice

Before calling for service, please ensure that the steps listed in clause 8 above have been followed.

FOR SERVICE or to find the address of your nearest authorised service centre in Australia **PLEASE CALL 1300 363 664** **OR EMAIL** customercare@aegaustralia.com.au For the cost of a local call (Australia only)	**SERVICE AUSTRALIA** AEG aeg.com/au	**FOR SPARE PARTS** or to find the address of your nearest spare parts centre in Australia **PLEASE CALL 13 13 50** **OR EMAIL** customercare@aegaustralia.com.au For the cost of a local call (Australia only)
FOR SERVICE or to find the address of your nearest authorised service centre in New Zealand **PLEASE CALL 0800 234 234** **OR EMAIL** customercare@electrolux.co.nz (New Zealand only)	**SERVICE NEW ZEALAND** AEG aegnewzealand.co.nz	**FOR SPARE PARTS** or to find the address of your nearest spare parts centre in New Zealand **PLEASE CALL 0800 10 66 20** **OR EMAIL** customercare@electrolux.co.nz (New Zealand only)

www.aeg.com/shop



TINS-B385URR2

CE

AEG