Series 6, Built-in wine cooler, 81.8 x 29.8 cm
KUW20VHF0G

Your personal wine cellar: built under wine cabinet 30cm width with adjustable temperature between 5°C and 20°C.

- **Capacity**: this wine cabinet has space to store up to 21 bottles at perfect drinking temperature.
- **Adjustable temperature**: enjoy your wine at the perfect drinking temperature.
- **LED light with presentation mode**: attractive illumination for your wine cabinet.
- **Reversible hinge**: move the door of your triple glazed wine cabinet to the side you prefer.

Technical Data

Energy Efficiency Class[1]:	F
Average annual energy consumption in kilowatt hour per year (kWh/a):	100 kWh/annum
Capacity of 75 cl bottles:	21
Airborne acoustical noise emissions :	38 dB(A) re 1pW
Airborne acoustical noise emission class:	C
Built-in / Free-standing:	Built-in
Door panel options:	Not possible
Height:	818 mm
Width of the appliance:	298 mm
Depth:	567 mm
Required niche size for installation (HxWxD):	820 x 300 x 550 mm
Net weight:	27.0 kg
Connection rating:	70 W
Fuse protection:	6 A
Interior ventilator:	Yes
Voltage:	220-240 V
Frequency:	50-60 Hz
Length electrical supply cord:	230.0 cm
Plug type:	GB plug
Number of compressors:	1
Number of independent cooling systems:	1
Reversible Door Hinge:	Yes
Interior light switch:	No
EAN code:	4242005265794
Brand:	Bosch
Product name / Commercial code:	KUW20VHF0G
Product category:	Winestorage

4 242005 265794

[1] Scale of Energy Efficiency Classes from A to G

Series 6, Built-in wine cooler, 81.8 x 29.8 cm
KUW20VHF0G

Your personal wine cellar: built under wine cabinet 30cm width with adjustable temperature between 5°C and 20°C.

- KUW20VHF0G
- Wine storage cabinet, Built-under appliance

Performance and Consumption

Functions
- Built-in fridge
- Glass
- Triple glazed door, UV-filter

Design features
- Illumination fridge: LED with Soft Start
- Illumination on/off: Yes
- Presenter Lighting: Yes
- Optical and accoustical
- Child lock
- Interior ventilator

Design features
- Number of Temparture Zones: 1
- Temperature range: 5-20 °C
- 4 PC bottle shelves for 0,75 l
- No.wooden grills in fridge: 3 PC
- Design of shelves: Standard shelf

Key features - Fridge section
- Ventilation in plinth, the plinth size can be varied
- Door aperture angle 115°
- Lockable appliance: No
- Variable plinth adaption
- Right hinged door, door reversible

Dimension and installation
- Niche Dimensions: 82 cm H x 30 cm W x 55 cm D
- Dimensions: 81.8 cm H x 29.8 cm W x 56.7 cm D

Country Specific Options
- Based on the results of the standard 24-hour test. Actual consumption depends on usage/position of the appliance.
- This appliance is intendend to be used exclusively for the storage of wine

Key features - Freezer section

Additional features

Design features
- EU19_EEK_D: F
- Total Volume : 58 l
- Net Fridge Volume : 58 l
- Net Freezer Volume : 0 l
- Annual Energy Consumption: 100 kWh/a
- Climate Class: SN-ST
- EU19_Fast freezer facility_D
- Noise Level : 38 dB , EU19_Noise emission class_D: C

Series 6, Built-in wine cooler, 81.8 x 29.8 cm
KUW20VHF0G

Measurements in mm

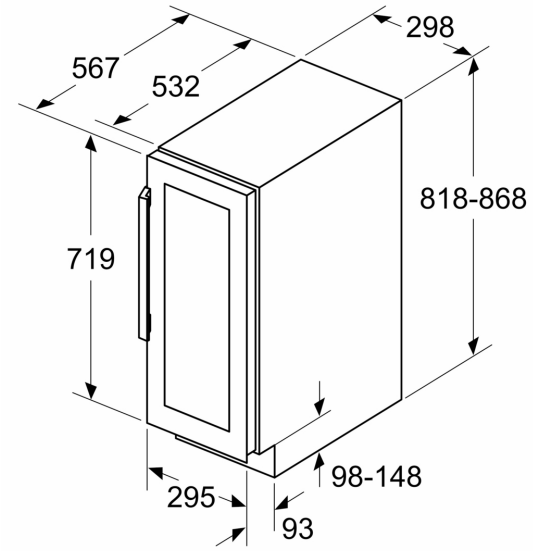

measurements in mm

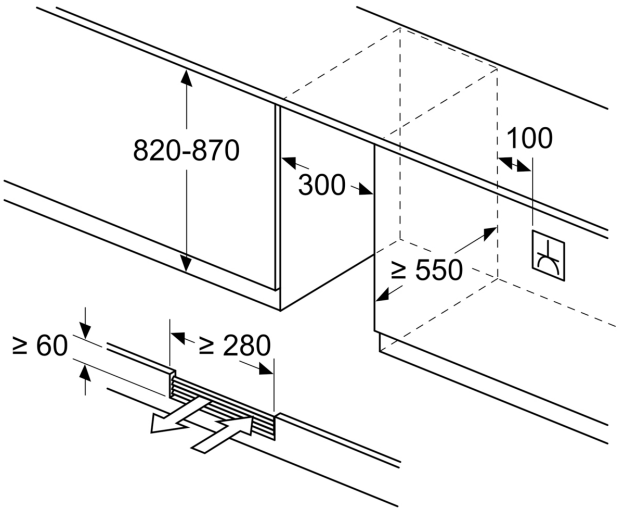
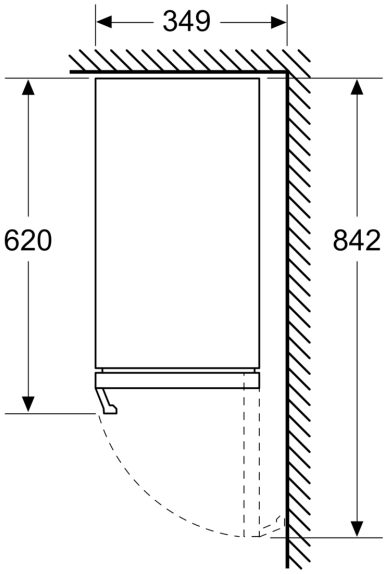
measurements in mm