NEFF
cook. create. inspire.

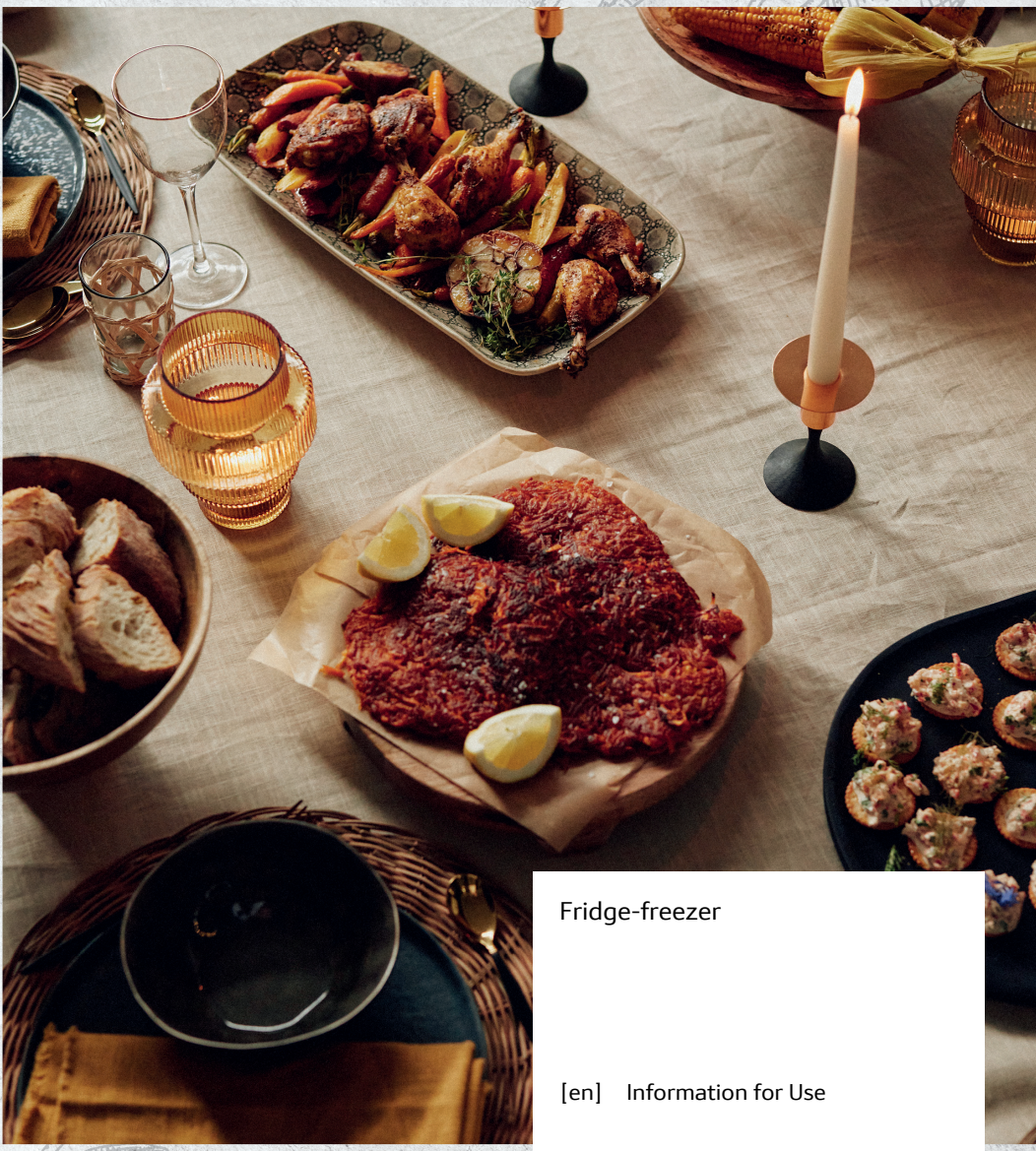

Fridge-freezer

[en] Information for Use

KU222..

You can find additional information and explanations online. Scan the QR code on the title page.

Table of contents

1 Safety 3
1.1 General information 3
1.2 Intended use 3
1.3 Restriction on user group 4
1.4 Safe transport 4
1.5 Safe installation 4
1.6 Safe use 5
1.7 Damaged appliance 7

2 Preventing material damage 8

3 Environmental protection and saving energy 8
3.1 Disposing of packaging 8
3.2 Saving energy 8

4 Installation and connection 9
4.1 Scope of delivery 9
4.2 Criteria for the installation location 9
4.3 Installing the appliance 10
4.4 Preparing the appliance for the first time 10
4.5 Connecting the appliance to the electricity supply 10

5 Familiarising yourself with your appliance 11
5.1 Appliance 11
5.2 Control panel 12

6 Features 12
6.1 Shelf 12
6.2 Door tray 13
6.3 Accessories 13

7 Basic operation 13
7.1 Switching on the appliance 13
7.2 Operating tips 14
7.3 Switching off the appliance 14
7.4 Setting the temperature 14

8 Additional functions 14
8.1 Super function 14
8.2 Sabbath mode 15

9 Alarm 15
9.1 Door alarm 15

10 Home Connect 15
10.1 Setting up the Home Connect app 16
10.2 Setting up Home Connect 16
10.3 Switching on the connection to the WLAN home network (Wi-Fi) 16
10.4 Intelligently networking appliances using Matter [1] 16
10.5 Switching off the connection to the WLAN home network (Wi-Fi) 16
10.6 Installing updates for the Home Connect software 16
10.7 Resetting Home Connect settings 16
10.8 Data protection 17

11 Refrigerator compartment 17
11.1 Tips for storing food in the refrigerator compartment 17
11.2 Chill zones in the refrigerator compartment 17
11.3 "OK" sticker 18

12 Floor area 18
12.1 Storing food in the floor area 18

13 Freezer compartment 18

[1] Matter is developed by Connectivity Standards Alliance™. This brand, related logos, and marks are trademarks of the Alliance, all rights reserved.

13.1 Freezer compartment door ... 18
13.2 Freezing capacity 18
13.3 Tips for storing food in the freezer compartment 19
13.4 Tips for freezing fresh food ... 19
13.5 Shelf life of frozen food at −18 °C 19
13.6 Defrosting methods for frozen food 19

14 Defrosting 20
14.1 Defrosting in the refrigerator compartment 20
14.2 Defrosting in the freezer compartment 20

15 Cleaning and servicing 20
15.1 Preparing the appliance for cleaning 20
15.2 Cleaning the appliance 21
15.3 Cleaning the condensation channel and drainage hole ... 21
15.4 Removing the fittings 22
15.5 Removing appliance components 22

16 Troubleshooting 22
16.1 Power failure 25

17 Storage and disposal 25
17.1 Taking the appliance out of operation 25
17.2 Disposing of old appliance ... 25

18 Customer Service 26
18.1 Product number (E-Nr.), production number (FD) and consecutive numbering (Z-Nr.) 26

19 Technical data 26
19.1 Information regarding Free and Open Source Software .. 27

20 Declaration of Conformity 27
20.1 Statement of Compliance for Great Britain 28

1 Safety

Observe the following safety instructions.

1.1 General information

- Read this instruction manual carefully.
- Keep the instruction manual and the product information safe for future reference or for the next owner.
- Do not connect the appliance if it has been damaged in transit.

1.2 Intended use

This appliance is only intended to be fitted under a counter.

Only use this appliance:
- for chilling and freezing food and for making ice cubes.
- in private households and in enclosed spaces in a domestic environment.
- Up to an altitude of 2000 m above sea level.

1.3 Restriction on user group

This appliance may be used by children aged 8 or over and by people who have reduced physical, sensory or mental abilities or inadequate experience and/or knowledge, provided that they are supervised or have been instructed on how to use the appliance safely and have understood the resulting dangers.
Do not let children play with the appliance.
Cleaning and user maintenance must not be performed by children unless they are being supervised.
Children above the age of three years old and younger than eight years old may load and unload the the fridge-freezer.

1.4 Safe transport

⚠ WARNING – Risk of injury!
The heavy weight of the appliance may result in injury when lifted.
- ▸ Do not lift the appliance on your own.

1.5 Safe installation

⚠ WARNING – Risk of electric shock!
Incorrect installation is dangerous.
- ▸ Connect and operate the appliance only in accordance with the specifications on the rating plate.
- ▸ Connect the appliance to a power supply with alternating current only via a properly installed socket with earthing.
- ▸ The protective conductor system of the domestic electrical installation must be properly installed.
- ▸ Never equip the appliance with an external switching device, e.g. a timer or remote control.
- ▸ When the appliance is installed, the mains plug of the power cord must be freely accessible. If free access is not possible, an isolating switch must be integrated into the permanent electrical installation according to the installation regulations.
- ▸ When installing the appliance, check that the power cable is not trapped or damaged.

If the insulation of the power cord is damaged, this is dangerous.
- ▸ Never let the power cord come into contact with heat sources.

⚠ WARNING – Risk of explosion!
If the appliance's ventilation openings are closed off, a leak in the refrigeration circuit may result in a flammable mixture of gas and air.
- Keep ventilation openings in the appliance casing or in the integrated casing clear of obstruction.

⚠ WARNING – Risk of fire!
It is dangerous to use an extended power cord and non-approved adapters.
- Do not use extension cables or multiple socket strips.
- Only use adapters and power cords approved by the manufacturer.
- If the power cord is too short and a longer one is not available, please contact an electrician to have the domestic installation adapted.

Portable multiple socket strips or portable power supply units may overheat and cause a fire.
- Do not place portable multiple socket strips or power supply units on the back of the appliance.

1.6 Safe use

⚠ WARNING – Risk of electric shock!
An ingress of moisture can cause an electric shock.
- Only use the appliance in enclosed spaces.
- Never expose the appliance to intense heat or humidity.
- Do not use steam- or high-pressure cleaners to clean the appliance.

⚠ WARNING – Risk of suffocation!
Children may put packaging material over their heads or wrap themselves up in it and suffocate.
- Keep packaging material away from children.
- Do not let children play with packaging material.

Children may breathe in or swallow small parts, causing them to suffocate.
- Keep small parts away from children.
- Do not let children play with small parts.

⚠ WARNING – Risk of explosion!

If the cooling circuit is damaged, flammable refrigerant may escape and explode.

- To accelerate the defrosting process, do not use any other mechanical devices or means other than those recommended by the manufacturer.
- If food is stuck to the freezer compartment, loosen it with a blunt object such as the handle of a wooden spoon.

Products which contain flammable propellants and explosive substances may explode, e.g. spray cans.

- Do not store products which contain flammable propellants (e.g. spray cans) or explosive substances in the appliance.

⚠ WARNING – Risk of fire!

Electrical devices within the appliance may cause a fire, e.g. heaters or electric ice makers.

- Do not operate electrical devices within the appliance.

⚠ WARNING – Risk of injury!

Containers that contain carbonated drinks may burst.

- Do not store containers that contain carbonated drinks in the freezer compartment.

Injury to the eyes caused by escaping flammable refrigerant and hazardous gases.

- Do not damage the tubes of the refrigerant circuit or the insulation.

⚠ WARNING – Risk of cold burns!

Contact with frozen food and cold surfaces may cause burns by refrigeration.

- Never put frozen food straight from the freezer compartment into your mouth.
- Avoid prolonged contact of the skin with frozen food, ice and surfaces in the freezer compartment.

⚠ CAUTION – Risk of harm to health!

To prevent food from being contaminated, you must observe the following instructions.

- If the door is open for an extended period of time, this may lead to a considerable temperature increase in the compartments of the appliance.
- Regularly clean the surfaces that may come into contact with food and accessible drain systems.
- Store raw meat and fish in suitable containers in the refrigerator so that they do not touch or drip on other food.
- If the fridge/freezer is empty for an extended period of time, switch off the appliance, defrost it, clean it and leave the door open to prevent the formation of mould.

Metal or metal-style parts in the appliance may contain aluminium. If acidic food comes into contact with aluminium in the appliance, aluminium foil ions may pass into the food.

- Do not consume soiled food.

1.7 Damaged appliance

⚠ WARNING – Risk of electric shock!

If the appliance or the power cord is damaged, this is dangerous.

- Never operate a damaged appliance.
- Never pull on the power cord to unplug the appliance. Always unplug the appliance at the mains.
- If the appliance or the power cord is damaged, immediately unplug the power cord or switch off the fuse in the fuse box.
- Call customer service. →*Page 26*

Improper repairs are dangerous.

- Repairs to the appliance should only be carried out by trained specialist staff.
- Only use genuine spare parts when repairing the appliance.
- If the power cord or the appliance power cable of this appliance is damaged, it must be replaced with a special power cord or special appliance power cable, which is available from the manufacturer or its Customer Service.

⚠ WARNING – Risk of fire!

If the tubes are damaged, flammable refrigerant and harmful gases may escape and ignite.

- Keep naked flames and ignition sources away from the appliance.
- Ventilate the room.
- Switch off the appliance. →*Page 14*
- Unplug the mains plug from the mains or switch off the circuit breaker in the fuse box.
- Call customer service. →*Page 26*

2 Preventing material damage

ATTENTION

Using the base, runners or appliance doors as a seat surface or climbing surface may damage the appliance.

- Do not stand or support yourself on the base, runners or doors.

Contamination with oil or fat may cause plastic parts and door seals to become porous.

- Keep plastic parts and door seals free of oil and grease.

Metal or metal-style parts in the appliance may contain aluminium. When aluminium comes into contact with acidic foods, it corrodes and discolours.

- Only store packaged food in the appliance.

If you clean fittings and accessories in the dishwasher, this may cause them to become deformed or discolour.

- Never clean fittings and accessory in the dishwasher.

3 Environmental protection and saving energy

3.1 Disposing of packaging

The packaging materials are environmentally compatible and can be recycled.

- Sort the individual components by type and dispose of them separately.

3.2 Saving energy

If you follow these instructions, your appliance will use less power.

Selecting the installation location

- Keep the appliance out of direct sunlight.
- Install the appliance as far away as possible from heating elements, cookers and other heat sources:
  - Maintain a 30 mm clearance to electric or gas cookers.
  - Maintain a 300 mm clearance to oil or solid-fuel cookers.
- Never cover or block the exterior ventilation grilles.

Saving energy during use

Note: The arrangement of the fittings does not affect the energy consumption of the appliance.

- Open the appliance only briefly and then close it carefully.
- Never cover or block the interior ventilation openings or the exterior ventilation grilles.
- Transport purchased food in a cool bag and place in the appliance quickly.
- Allow warm food and drinks to cool down before storing them.
- Thaw frozen food in the refrigerator compartment to utilise the low temperature of the food.
- Always leave some space between the food and to the back panel.
- Defrost the freezer compartment regularly.
- Open the freezer compartment door only briefly and then close it properly.

4 Installation and connection

4.1 Scope of delivery

After unpacking all parts, check for any transport damage and for completeness of delivery.
If you have any complaints, contact your dealer or our after-sales service → *Page 26*.

The delivery consists of the following:

- Built-under appliance
- Equipment and accessories [1]
- Installation material
- Installation instructions
- User manual
- Customer service directory
- Warranty enclosure [2]
- Energy label
- Information on energy consumption and noises
- Information about Home Connect

4.2 Criteria for the installation location

⚠ **WARNING**
Risk of explosion!
If the appliance is in a space that is too small, a leak in the refrigeration circuit may result in a flammable mixture of gas and air.

- ▸ Only install the appliance in a space with a volume of at least 1 m^3 per 8 g refrigerant. The volume of refrigerant is indicated on the rating plate.
  → *"Appliance", Fig.* **1** / 3 *Page 12*

The weight of the appliance ex works may be up to 35 kg depending on the model.
The subfloor must be sufficiently stable to bear the weight of the appliance.
This refrigerator is intended for use at ambient temperatures of 10 °C to 43 °C.
The appliance is fully functional within the permitted room temperature.
If the appliance is operated at colder room temperatures, the appliance will not be damaged up to a room temperature of 5 °C.

Niche dimensions

Observe the niche dimensions if you install your appliance in the niche. If

[1] Depending on the appliance specifications
[2] Not in all countries

this is not the case, problems may occur when installing the appliance.

Niche depth

Install the appliance in the recommended niche depth of 560 mm.
If the niche depth is smaller, the energy consumption increases slightly.
The niche depth must be a minimum 550 mm.

Niche width

An inside niche width of at least 600 mm is required for the appliance.

Over-and-under and side-by-side installation

If you want to install 2 refrigerating appliances one over the other or side by side, you must maintain a clearance of at least 150 mm between the appliances. Selected appliances can be installed without a minimum clearance. Ask your dealer or kitchen planner about this.

4.3 Installing the appliance

⚠ **WARNING**
Risk of electric shock!
Liquid in the control elements may be dangerous.

- Always install the enclosed niche cover in accordance with the enclosed installation instructions.
- Install the appliance in accordance with the enclosed installation instructions.

4.4 Preparing the appliance for the first time

1. Remove the informative material.
2. Remove the protective foil and transit bolts, e.g. remove the adhesive strips and carton.
3. Clean the appliance for the first time. →*Page 21*

4.5 Connecting the appliance to the electricity supply

1. Insert the appliance plug of the power cord into the appliance.
2. Insert the mains plug of the appliance's power cable in a socket nearby.
   The connection data of the appliance can be found on the rating plate.
   → *"Appliance", Fig.* 1 / 3 *Page 12*
3. Check the mains plug is inserted properly.

✔ The temperature display shows an animation and the control panel is locked.
✔ The appliance is ready to use once the animation has ended and an LED lights up for the temperature display.

5 Familiarising yourself with your appliance

5.1 Appliance

You can find an overview of the parts of your appliance here.

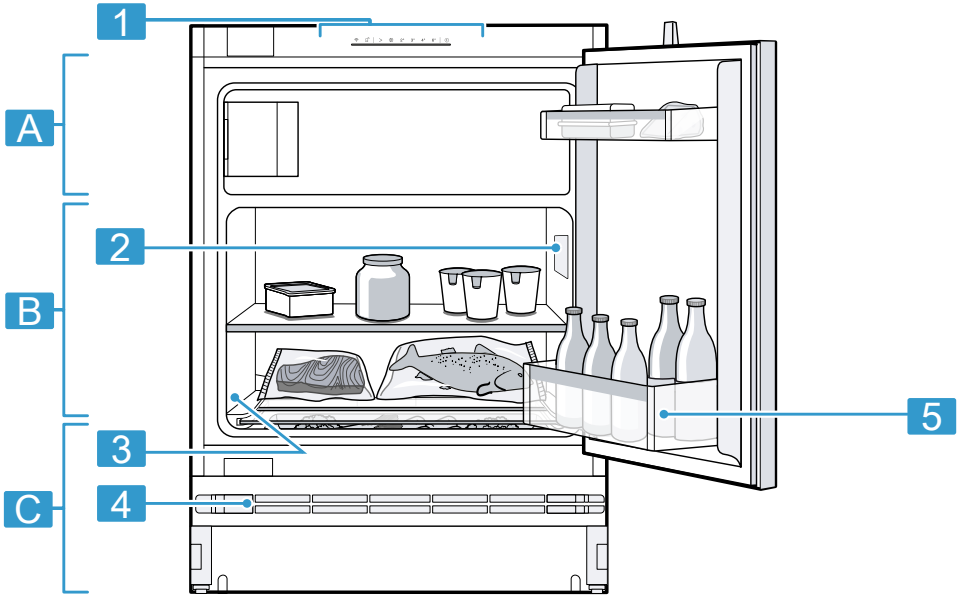

1

Deviations between your appliance and the diagrams may differ with regard to their features and size.

A	Freezer compartment →*Page 18*
B	Refrigerator compartment →*Page 17*
C	Floor area →*Page 18*
1	Control panel →*Page 12*
2	Lighting

3	Rating plate →*Page 26*
4	Exterior ventilation grille
5	Door tray for large bottles →*Page 13*

5.2 Control panel

You can use the control panel to configure all functions of your appliance and to obtain information about the operating status.

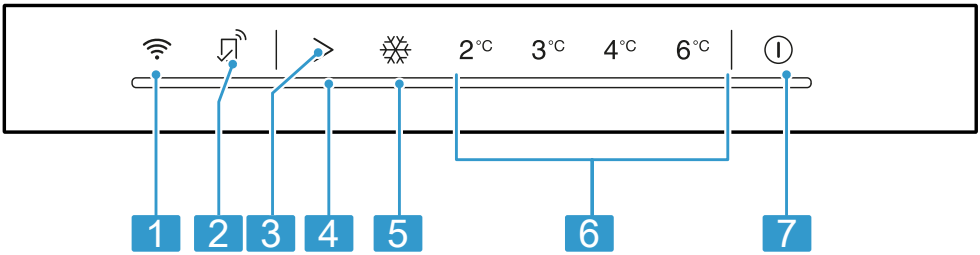

2

1	⌔ switches the connection to the WLAN home network (Wi-Fi) on or off.
2	⇗ lights up if user-defined settings have been set via the Home Connect app. You can find more information in the Home Connect app.
3	> sets the temperature of the refrigerator compartment.
4	> lights up when the alarm is switched on.
5	❄ lights up when the Super function is switched on.
6	Displays the set temperature for the refrigerator compartment in °C.
7	⏻ switches the appliance on or off.

6 Features

The features of your appliance depend on the model.

6.1 Shelf

To vary the shelf as required, you can remove the shelf and re-insert it elsewhere.
→ *"Removing the shelf", Page 22*

6.2 Door tray

To adjust the door tray as required, you can remove the door tray and re-insert elsewhere.
→ *"Removing door tray", Page 22*

6.3 Accessories

Use original accessories. These have been made especially for your appliance.
The accessories for your appliance depend on the model.

Egg tray

Store eggs safely on the egg tray.

Bottle holder

The bottle holder prevents bottles from falling over when the appliance door is opened and closed.

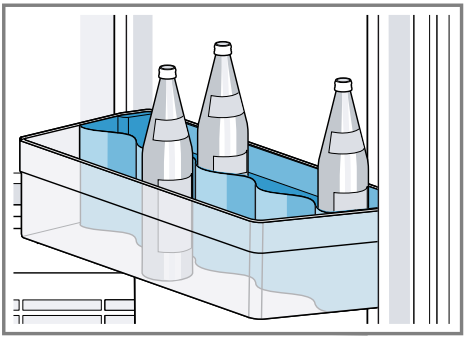

Removing the bottle holder

1. Remove the door rack for large bottles. → *Page 22*
2. Loosen the bottle holder from the back wall of the door tray for large bottles on the left first ① and then on the right ②, then remove the bottle holder diagonally upwards ③.

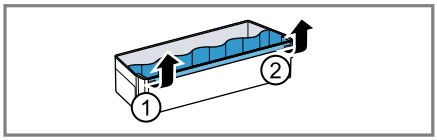

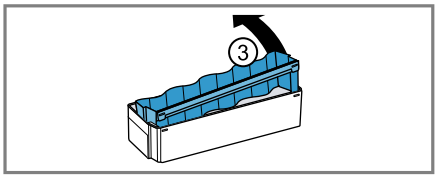

Ice cube tray

Use the ice cube tray to make ice cubes.

Making ice cubes

Use only drinking water to make ice cubes.

1. Fill the ice cube tray with drinking water up to ¾ and place in the freezer compartment.
   If the ice cube tray is stuck to the freezer compartment, loosen it with a blunt object such as the handle of a wooden spoon.
2. To loosen the ice cubes, twist the ice cube tray slightly or hold it briefly under flowing water.

7 Basic operation

7.1 Switching on the appliance

1. Electrically connect the appliance. → *Page 10*
   Note: If the appliance has been previously switched off using the control panel, press and hold ① for three seconds.
   - ✔ The temperature display shows an animation and the control panel is locked.
   - ✔ The appliance is ready to use once the animation has ended and

an LED lights up for the temperature display.
✔ The appliance begins to cool.
2. Set the required temperature.
→ *Page 14*

7.2 Operating tips

- Once you have switched on the appliance, the set temperature is only reached after several hours. Do not put any food in the appliance until the set temperature has been reached.
- When closing the door, make sure that the door is not blocked by stored items.
- When you close the door, a vacuum may be created. The door is then difficult to open again. Wait a moment until the vacuum is offset.
- The temperature in the appliance varies due to the following conditions:
  - How often the appliance is opened
  - Load capacity
  - Temperature of newly stored food
  - Ambient temperature
  - Direct sunlight

7.3 Switching off the appliance

▸ Press and hold ① for 3 seconds.

7.4 Setting the temperature

Setting the refrigerator compartment temperature

▸ Press > repeatedly until the temperature display shows the required temperature setting.
The recommended temperature in the refrigerator compartment is 4 °C.
→ *""OK" sticker", Page 18*

Setting the freezer compartment temperature

▸ In order to set the freezer compartment temperature, change the refrigerator compartment temperature → *Page 14*.
The refrigerator compartment temperature influences freezer compartment temperature. Refrigerator compartment temperatures that are set to warm generate warmer freezer compartment temperatures.

8 Additional functions

Find out which additional functions can be used for your appliance. Additional functions can be set via the Home Connect app.

8.1 Super function

With the Super function, the refrigerator compartment and the freezer compartment cool more intensively. Switch on the Super function 4 to 6 hours before placing food weighing 2 kg or more.
In order to utilise the freezing capacity, use the Super function.
→ *"Freezing capacity", Page 18*

Note: When the Super function is switched on, increased noise may occur.

Switching on Super function

▸ Press > repeatedly until ❄ lights up.

Note: After approx. 24 hours, the appliance switches to normal operation.

Switching off Super function

▸ Press > repeatedly until the temperature display shows the required temperature.

8.2 Sabbath mode

To ensure that you can also use the appliance on the Sabbath, the Sabbath mode switches off all non-essential functions.

During Sabbath mode, the following functions are switched off:

- Alarm
- Interior lighting
- Signal tones
- Messages on the control panel

Note: The brightness of the control panel lighting is reduced during the Sabbath mode.

Switching on Sabbath mode

- ▸ Press and hold > for 15 seconds until a third audible signal sounds.
- ✔ A confirmation tone sounds.
- ✔ > lights up.

Note: After approx. 74 hours, the appliance switches to normal mode.

Switching off Sabbath mode

- ▸ Press and hold > for 15 seconds until an audible signal sounds.

9 Alarm

9.1 Door alarm

If the appliance door is open for a while, the door alarm switches on. A warning tone sounds and > lights up.

Switching off the door alarm

- ▸ Close the appliance door or press >.
- ✔ The warning tone is switched off.

10 Home Connect

This appliance is network-capable. Connect your appliance to a mobile device to control its functions via the Home Connect app.
The Home Connect services are not available in every country. The availability of the Home Connect function depends on the availability of Home Connect services in your country. You can find information about this at: *www.home-connect.com*.
To be able to use Home Connect, you must first set up the connection to the WLAN home network (Wi-Fi [1]) and to the Home Connect app.
After switching on the appliance, wait at least 3 minutes until internal device initialisation is complete. Only then should you set up Home Connect.
The Home Connect app guides you through the entire login process. Follow the instructions in the Home Connect app to configure the settings.

Tip: Please also follow the instructions in the Home Connect app.

Notes

- Please note the safety precautions in this instruction manual and make sure that they are also observed when operating the appliance via the Home Connect app.
  → *"Safety", Page 3*
- Operating the appliance on the appliance itself always takes priority. During this time it is not possible to operate the appliance using the Home Connect app.

[1] Wi-Fi is a registered trademark of the Wi-Fi Alliance.

10.1 Setting up the Home Connect app

1. Install the Home Connect app on your mobile device.
2. Start the Home Connect app and set up access for Home Connect. The Home Connect app guides you through the entire login process.

10.2 Setting up Home Connect

Requirement: The appliance is receiving signals from the WLAN home network (Wi-Fi) at its installation location.

1. Scan the following QR code.

RFSM0Z01

You can install the Home Connect app and connect your appliance via the QR code.

2. Follow the instructions in the Home Connect app.

10.3 Switching on the connection to the WLAN home network (Wi-Fi)

▸ Press .

10.4 Intelligently networking appliances using Matter [1]

The universal Matter standard makes it possible to network smart appliances from different manufacturers. You can network smart appliances using a voice assistant or other central control units, for example.

Note: Not all appliances support the Matter standard. Check in the Home Connect app whether your appliance supports the Matter standard.

Requirements

- The appliance is connected to the Wi-Fi home network and the Home Connect app.
- An app that supports the Matter standard for home appliances has been installed on your mobile device.

▸ Follow the instructions in the Home Connect app to add your appliance to your Matter network.

10.5 Switching off the connection to the WLAN home network (Wi-Fi)

▸ Press .

10.6 Installing updates for the Home Connect software

Note: If an update of the Home Connect software is available, a message appears in the Home Connect app.

▸ To install the update for the Home Connect software, follow the instructions in the Home Connect app.

✔ The control panel is partially locked during the installation.

10.7 Resetting Home Connect settings

If your appliance experiences connection problems with the WLAN home network (Wi-Fi) or your appli-

[1] Matter is developed by Connectivity Standards Alliance™. This brand, related logos, and marks are trademarks of the Alliance, all rights reserved.

ance wants to log into a different WLAN home network (Wi-Fi), you can reset the Home Connect settings.

- ▸ Press and hold ⚙ for six seconds until ⚙ goes out.
- ✔ The Home Connect settings have been reset.

10.8 Data protection

Please see the information on data protection.

The first time your appliance is registered on a home network connected to the Internet, your appliance will transmit the following types of data to the Home Connect server (initial registration):

- Unique appliance identification (consisting of appliance codes as well as the MAC address of the installed Wi-Fi communication module).
- Security certificate of the Wi-Fi communication module (to ensure a secure data connection).
- The current software and hardware version of your appliance.
- Status of any previous resetting to factory settings.

This initial registration prepares the Home Connect functions for use and is only required when you want to use the Home Connect functions for the first time.

Note: Please note that the Home Connect functions can only be utilised with the Home Connect app. Information on data protection can be retrieved in the Home Connect app.

11 Refrigerator compartment

You can keep meat, sausage, fish, dairy products, eggs, prepared meals and pastries in the refrigerator compartment.
The temperature can be set from 2 °C to 6 °C.
The refrigerator compartment can also be used to store highly perishable foods in the short to medium term. The lower the selected temperature, the longer the food remains fresh.

11.1 Tips for storing food in the refrigerator compartment

- Only store food when fresh and undamaged.
- Store food covered or in air-tight packaging.
- To avoid impeding the circulation of air and to prevent food from freezing, do not place food so that it has direct contact with the back wall.
- Allow hot food and drinks to cool down first before placing in the appliance.
- Observe the best-before date or use-by date specified by the manufacturer.

11.2 Chill zones in the refrigerator compartment

The air circulation in the refrigerator compartment creates different chill zones.

Coldest zone

The coldest zone is between the arrow stamped on the side and the shelf underneath.

Tip: Store highly perishable food such as fish, sausages and meat in the coldest zone.

Warmest zone

The warmest zone is at the very top of the door.

Tip: Store food that does not spoil easily in the warmest zone, e.g. hard cheese and butter. Cheese can then continue to release its aroma and the butter will still be easy to spread.

11.3 "OK" sticker

The "OK" sticker lets you check whether the refrigerator compartment reaches the safe temperature ranges of +4 °C or colder recommended for food.
The "OK" sticker is not included with all models.
If the sticker does not indicate "OK", gradually reduce the temperature.
→ *"Setting the refrigerator compartment temperature", Page 14*
Once the appliance is switched on, it may take up to 12 hours until the set temperature is reached.

Correct setting

12 Floor area

You can store the same type of food in the floor area as you can in the refrigerator compartment.
The temperature in the floor area matches the temperature in the rest of the refrigerator compartment.
→ *Page 17*

12.1 Storing food in the floor area

- To store food in the floor area, slide the cover backwards over the floor area.

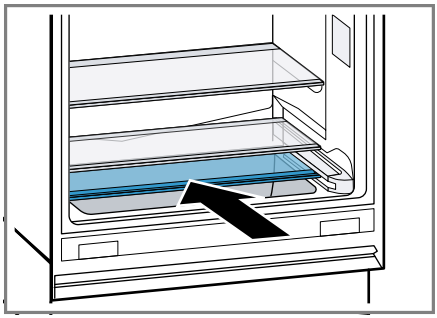

13 Freezer compartment

You can store frozen food, freeze food and make ice cubes in the freezer compartment.
The temperature in the freezer compartment depends on the temperature in the refrigerator compartment.
Long-term storage of food should be at –18 °C or lower.
The freezer compartment can be used to store perishable food long-term. The low temperatures slow down or stop the spoilage.

13.1 Freezer compartment door

To ensure that the frozen food that is stored does not thaw and the freezer compartment is not covered in too much ice, always close the freezer compartment door.

13.2 Freezing capacity

The freezing capacity indicates the quantity of food that can be frozen right through to the centre within a specific period of time.

Information on freezing capacity can be found on the rating plate.
→ *"Appliance", Fig. 1/3 Page 12*

Prerequisites for freezing capacity

1. When placing fresh food in the appliance, switch on Super function.
   → *"Switching on Super function", Page 14*
2. Place the food as close as possible to the back wall of the freezer compartment.

13.3 Tips for storing food in the freezer compartment

- Store food in air-tight packaging.
- Do not bring food which is to be frozen into contact with frozen food.
- Spread out the food over a wide area in the freezer compartment.

13.4 Tips for freezing fresh food

- Freeze fresh and undamaged food only.
- Freeze food in portions.
- Cooked food is more suitable than food that can be eaten raw.
- Vegetables: Wash, chop up and blanch before freezing.
- Fruit: Wash, pit and perhaps peel, possibly add sugar or ascorbic acid solution.
- Food that is suitable for freezing includes baked items, fish and seafood, meat, game, poultry, eggs without shells, cheese, butter and quark, ready meals and leftovers.
- Food that is unsuitable for freezing includes lettuce, radishes, eggs in shells, grapes, raw apples and pears, yoghurt, sour cream, crème fraîche and mayonnaise.

Packing frozen food

If you select suitable packaging material and the correct type of packaging, you can determine the product quality and prevent freezer burn.

1. Place the food in the packaging.
2. Squeeze out the air.
3. Pack food airtight to prevent it from losing flavour and drying out.
4. Label the packaging with the contents and the date of freezing.

13.5 Shelf life of frozen food at –18 °C

Food	Storage time
Fish, sausages, prepared meals and baked goods	up to 6 months
Poultry, meat	up to 8 months
Vegetables, fruit	up to 12 months

13.6 Defrosting methods for frozen food

⚠ **CAUTION**
Risk of harm to health!
During the thawing process, bacteria may multiply and spoil the frozen food.

- ▸ Do not refreeze food after it has been defrosted or started to defrost.
- ▸ Refreeze food only after cooking.
- ▸ These items should no longer be stored for the maximum storage period.

- Defrost animal-based food, such as fish, meat, cheese, quark, in the refrigerator compartment.
- Defrost bread at room temperature.

- Prepare food for immediate consumption in the microwave, in the oven, or on the hob.

14 Defrosting

14.1 Defrosting in the refrigerator compartment

When the appliance is operating, condensation droplets or frost form on the rear panel of the refrigerator compartment due to functional reasons. The back panel in the refrigerator compartment defrosts automatically.
Condensation runs through the condensation channel into the drainage hole to the evaporation pan and does not have to be wiped away.
To ensure that the condensation can drain and odours do not form, observe the following information:
Cleaning the condensation channel and drainage hole →*Page 21*.

14.2 Defrosting in the freezer compartment

The freezer compartment does not defrost automatically. A layer of hoarfrost in the freezer compartment impairs refrigeration of the frozen food and increases power consumption.

Defrosting the freezer compartment

Regularly defrost the freezer compartment.

1. Switch on the Super function approx. four hours before defrosting.
   → *"Switching on Super function", Page 14*
   This means that the food reaches very low temperatures and it can be stored for longer at room temperature.
2. Remove the frozen food and temporarily place it in a cool location. Wrap the frozen food with ice packs, if available, in coverings or newspaper.
3. Switch off the appliance.
   →*Page 14*
4. Disconnect the appliance from the power supply.
   Unplug the appliance from the mains or switch off the circuit breaker in the fuse box.
5. ⚠ **WARNING – Risk of burns!**
   Hot water, splashes of water and steam can lead to burns.
   - Always fill the pan for the defrosting process with hot, but not boiling, water.

   To accelerate the defrosting process, place a pan of hot, but not boiling, water on a trivet in the freezer compartment.
6. Wipe up the condensation water with a soft cloth or sponge.
7. Rub the freezer compartment dry with a soft, dry cloth.
8. Electrically connect the appliance.
   →*Page 10*
9. Put the frozen food in the appliance. →*Page 19*

15 Cleaning and servicing

To keep your appliance working efficiently for a long time, it is important to clean and maintain it carefully. Customer Service must clean inaccessible points. Cleaning by customer service can give rise to costs.

15.1 Preparing the appliance for cleaning

1. Switch off the appliance.
   →*Page 14*

2. Disconnect the appliance from the power supply.
   Unplug the appliance from the mains or switch off the circuit breaker in the fuse box.
3. Take out all of the food and store it in a cool place.
   Place ice packs (if available) onto the food.
4. If there is a layer of hoarfrost, allow this to defrost.
5. Remove all fittings and accessories from the appliance.
   → *Page 22*

15.2 Cleaning the appliance

⚠ **WARNING**

Risk of electric shock!

An ingress of moisture can cause an electric shock.

- Do not use steam- or high-pressure cleaners to clean the appliance.

Liquid in the lighting or in the controls can be dangerous.

- The rinsing water must not drip into the lighting or controls.

ATTENTION

Unsuitable cleaning products may damage the surfaces of the appliance.

- Do not use hard scouring pads or cleaning sponges.
- Do not use harsh or abrasive detergents.
- Do not use cleaning products with a high alcohol content.

If liquid gets into the drainage hole, the evaporation pan may overflow.

- The rinsing water must not get into the drainage hole.

If you clean fittings and accessories in the dishwasher, this may cause them to become deformed or discolour.

- Never clean fittings and accessory in the dishwasher.

1. Prepare the appliance for cleaning.
   → *Page 20*
2. Clean the appliance, the fittings, the accessories and the door seals with a dish cloth, lukewarm water and a little pH-neutral washing-up liquid.
3. Dry thoroughly with a soft, dry cloth.
4. Insert the fittings.
5. Electrically connect the appliance.
   → *Page 10*
6. Putting the food into the appliance.

15.3 Cleaning the condensation channel and drainage hole

Regularly clean the condensation channel and drainage hole to ensure that the condensation can drain.

1. Remove the shelf over the floor area. → *Page 22*
2. Carefully clean the condensation channel and the drainage hole, e.g. using a cotton bud.

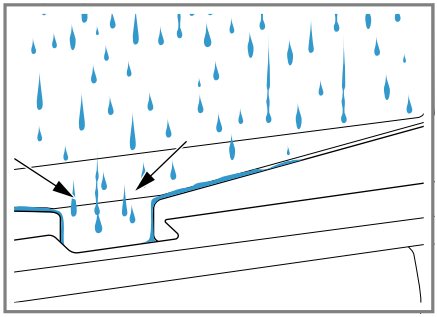

15.4 Removing the fittings

If you want to clean the fittings thoroughly, remove these from your appliance.

Removing the shelf

- Lift the shelf at the front ①, pull it out and remove it ②.

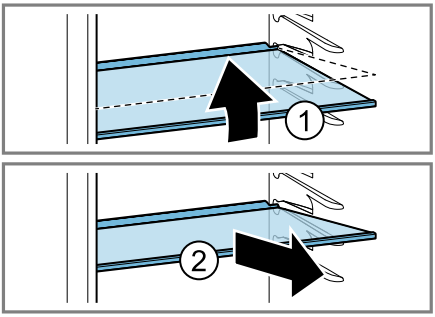

Removing door tray

- Lift the door tray and remove it.

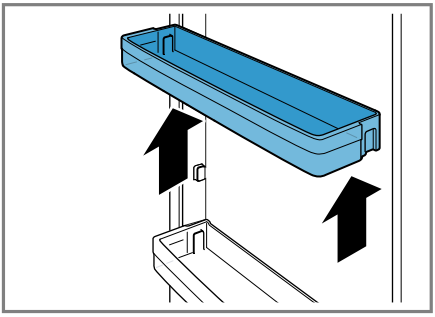

15.5 Removing appliance components

If you want to clean your appliance thoroughly, you can remove certain components from your appliance.

Removing the cover over the floor area

1. Remove the door rack for large bottles. → *Page 22*
2. Pull out the cover as far as it will go over the floor area, ①, lift it over the end stop ② and swivel it downwards and out ③.

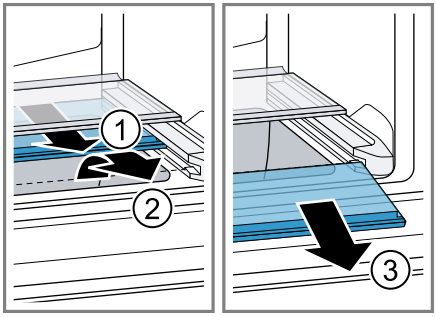

16 Troubleshooting

You can rectify minor faults on your appliance yourself. Read the troubleshooting information before contacting after-sales service. This will avoid unnecessary costs.

⚠ **WARNING**
Risk of electric shock!
Improper repairs are dangerous.
- Repairs to the appliance should only be carried out by trained specialist staff.
- Only use genuine spare parts when repairing the appliance.

- If the power cord or the appliance power cable of this appliance is damaged, it must be replaced with a special power cord or special appliance power cable, which is available from the manufacturer or its Customer Service.

Fault	Cause and troubleshooting
The appliance is not cooling, the displays and lighting are lit.	Showroom mode is switched on. **1.** Disconnect the appliance from the mains. Unplug the appliance from the mains or switch off the circuit breaker in the fuse box. **2.** Wait 2 minutes. **3.** Reconnect the appliance. →*Page 10* **4.** Press and hold > until 4 audible signals have sounded. **5.** After a short time, check whether your appliance is cooling.
The LED lighting does not work.	Different causes are possible. ▸ Call customer service. The customer service number can be found in the enclosed customer service directory.
The refrigeration unit is switching on more frequently and for longer.	The appliance has been opened frequently. ▸ Do not open appliance door unnecessarily.
	The exterior ventilation grilles are blocked. ▸ Remove any obstructions from in front of the exterior ventilation grilles.
	Not a fault. Modern refrigeration machines switch on more frequently and have different power levels to cool more efficiently. ▸ Remove any obstructions from in front of the exterior ventilation grilles. ▸ Install the appliance as far away as possible from heating elements, cookers and other heat sources. Avoid prolonged exposure of the appliance to direct sunlight. ▸ Regularly defrost the freezer compartment. →*Page 20* ▸ Only open the appliance door as briefly as necessary. ▸ Allow hot food and drinks to cool down first before storing in the appliance.

Fault	Cause and troubleshooting
A layer of frost forms on the back wall of the refrigerator compartment.	Not a fault. Modern refrigeration machines ensure a more even temperature in the refrigerator compartment. The back wall of the refrigerator compartment is defrosted automatically at regular intervals. ▸ Only open the appliance door as briefly as necessary. ▸ Pack the food airtight or cover it. ▸ Allow hot food and drinks to cool down first before storing in the appliance. ▸ Always leave some space between the food and the interior walls.
Home Connect is not working properly.	Different causes are possible. ▸ Go to *www.home-connect.com*.
The warning tone sounds. The door alarm is switched on.	The appliance door is open. ▸ Close the appliance door.
The temperature differs greatly from the setting.	Different causes are possible. **1.** Switch off the appliance. →*Page 14* **2.** Switch the appliance back on after five minutes. →*Page 13* ▸ If the temperature is too warm, check the temperature again after a couple of hours. ▸ If the temperature is too cold, check the temperature again on the following day.
The base of the refrigerator compartment is wet.	The condensation channel or drainage hole are blocked. ▸ Clean the condensation channel and the drainage hole. →*Page 21*
The appliance hums, bubbles, buzzes, gargles or clicks.	Not a fault. A motor is running, e.g. refrigerating unit, fan. Refrigerant flows through the pipes. The motor, switches or solenoid valves are switching on or off. No action required.

Fault	Cause and troubleshooting
The appliance makes noises.	Fittings wobble or stick. ▸ Check the removable fittings and, if required, replace these.
	Bottles or containers are touching. ▸ Move the bottles or containers away from each other.
	Super function is switched on. No action required.

16.1 Power failure

During a power failure, the temperature in the appliance rises; this reduces the storage time and the quality of the frozen food.
On the website for your appliance, the technical data provides you with the storage times for frozen food in the event of a fault.

Notes

- Open the appliance as little as possible during a power failure and do not place any other food in the appliance.
- Check the quality of the food immediately after a power failure.
  - Dispose of any frozen food that has defrosted and is hotter than 5 °C.
  - Cook or fry slightly thawed frozen food, and then either consume it or freeze it again.

17 Storage and disposal

17.1 Taking the appliance out of operation

1. Switch off the appliance.
   →*Page 14*
2. Disconnect the appliance from the power supply.
   Unplug the appliance from the mains or switch off the circuit breaker in the fuse box.
3. Remove all of the food.
4. Defrost the appliance. →*Page 20*
5. Clean the appliance. →*Page 21*
6. To guarantee the ventilation inside the appliance, leave the appliance open.

17.2 Disposing of old appliance

Valuable raw materials can be reused by recycling.

⚠ **WARNING**
Risk of harm to health!
Children can lock themselves in the appliance, thereby putting their lives at risk.

- Leave shelves and containers inside the appliance to prevent children from climbing in.
- Keep children away from the redundant appliance.

⚠ **WARNING**
Risk of fire!
If the tubes are damaged, flammable refrigerant and harmful gases may escape and ignite.

- Do not damage the tubes of the refrigerant circuit or the insulation.

1. Unplug the appliance from the mains.
2. Cut through the power cord.
3. Dispose of the appliance in an environmentally friendly manner. Information about current disposal methods are available from your specialist dealer or local authority.

This appliance is labelled in accordance with European Directive 2012/19/EU concerning used electrical and electronic appliances (waste electrical and electronic equipment - WEEE). The guideline determines the framework for the return and recycling of used appliances as applicable throughout the EU.

18 Customer Service

Function-relevant genuine spare parts according to the corresponding Ecodesign Order can be obtained from Customer Service for a period of at least 10 years from the date on which your appliance was placed on the market within the European Economic Area.

Note: Under the terms of the manufacturer's warranty applicable to the location, the use of Customer Service is free of charge. The minimum duration of the warranty (manufacturer's warranty for private consumers) in the European Economic Area is 2 years according to the terms of warranty applicable to the location. The terms of warranty do not affect other rights or claims held by yourself under local legislation.

Detailed information about the warranty period and the warranty conditions in your country is available via the QR code on the enclosed document on service contacts and warranty conditions, from our customer service or on our website.
If you contact Customer Service, you will require the product number (E-Nr.), the production number (FD) and the consecutive numbering (Z-Nr.) of your appliance.
You can find the contact details for our customer service via the QR code on the enclosed document on service contacts and warranty conditions or on our website.

18.1 Product number (E-Nr.), production number (FD) and consecutive numbering (Z-Nr.)

You can find the product number (E-Nr.), the production number (FD) and the consecutive numbering (Z-Nr.) on the appliance's rating plate.
→ *"Appliance", Fig.* 1/3 *Page 12*
Make a note of your appliance's details and the Customer Service telephone number to find them again quickly.

19 Technical data

Refrigerant, cubic capacity and further technical specifications can be found on the rating plate.
→ *"Appliance", Fig.* 1/3 *Page 12*
This product contains a light source from energy efficiency class F. The light source is available as a spare part and should only be replaced by trained specialist staff.
You can find more information about your model online at *https://*

eprel.ec.europa.eu/[1]. This web address is linked to the official EU EPREL product database. Please then follow the instructions on searching for the model. The model identifier is made up of the characters before the slash in the product number (E-Nr.) on the rating plate. Alternatively, you can also find the model identifier in the first line of the EU energy label.

19.1 Information regarding Free and Open Source Software

This product includes software components that are licensed by the copyright holders as free or open source software.
The applicable licence information is stored on your home appliance. You can also access the applicable licence information via your Home Connect app: "Profile -> Legal information -> Licence Information".[2]
You can download the licence information on the brand product website. (Please search on the product website for your appliance model and additional documents). Alternatively, you can request the relevant information from oss-request@bshg.com or BSH Hausgeräte GmbH, Carl-Wery-Str. 34, 81739 Munich, Germany.
The source code will be made available to you on request.
Please send your request to oss-request@bshg.com or BSH Hausgeräte GmbH, Carl-Wery-Str.34, 81739 Munich, Germany.
Subject: „OSSREQUEST“
The cost of performing your request will be charged to you. This offer is valid for three years from the date of purchase or at least as long as we offer support and spare parts for the relevant appliance.

20 Declaration of Conformity

BSH Hausgeräte GmbH hereby declares that the appliance with Home Connect functionality conforms to the essential requirements and other relevant provisions of Directive 2014/53/EU.
A detailed RED Declaration of Conformity can be found online at *www.neff-home.com* among the additional documents on the product page for your appliance.

CE

Hereby, BSH Hausgeräte GmbH declares that the appliance with Home Connect functionality is in compliance with relevant statutory requirements.[3]
A detailed Declaration of Conformity can be found online at *www.neff-home.com/uk* among the additional documents on the product page for your appliance.[3]

[1] Only applies to countries in the European Economic Area
[2] Depending on the appliance specifications
[3] Only applies to Great Britain

UK
CA

2.4 GHz band (2400–2483.5 MHz): Max. 100 mW
5-GHz band (5150–5350 MHz + 5470–5725 MHz): max. 150 mW

	BE	BG	CZ	DK	DE	EE	IE	EL	ES
	FR	HR	IT	CY	LI	LV	LT	LU	HU
	MT	NL	AT	PL	PT	RO	SI	SK	FI
	SE	NO	CH	TR	IS	UK (NI)			
5 GHz WLAN (Wi-Fi): For indoor use only.									

AL	BA	MD	ME	MK	RS	UK	UA
5 GHz WLAN (Wi-Fi): For indoor use only.							

20.1 Statement of Compliance for Great Britain

The full Statement of Compliance according to the Product Security and Telecommunications Infrastructure (Security Requirements for Relevant Connectable Products) Regulations 2023 can be found online at www.neff-home.com/uk/ among the additional documents on the product page for your appliance.

Product type
This statement of compliance covers the products described in this information for use whose model identifier group is seen on the title page. The full model identifier is made up of the characters before the slash in the product number (E no.) which can be found on the rating plate. Alternatively, you can also find the model identifier in the first line of the UK Energy Label.

Name and address of manufacturer
BSH Hausgeräte GmbH, Carl-Wery-Strasse 34, 81739 München, Germany
This statement of compliance is prepared by the manufacturer.

The manufacturer, BSH Hausgeräte GmbH deems that it has complied with

- provision 5.1-1 of ETSI EN 303 645 v2.1.1 and, where relevant, provision 5.1-2 of ETSI EN 303 645 v2.1.1;
- provision 5.2-1 of ETSI EN 303 645 v2.1.1;
- provision 5.3-13 of ETSI EN 303 645 v2.1.1.

Support period
BSH Hausgeräte GmbH will provide security updates that are necessary to maintain the main functions free of charge until at least 28/02/2034.

Valid within Great Britain:
Imported to Great Britain by
BSH Home Appliances Ltd.
Grand Union House
Old Wolverton Road
Wolverton, Milton Keynes
MK12 5PT
United Kingdom

BSH Hausgeräte GmbH
Carl-Wery-Straße 34
81739 München, GERMANY

Register your product online
neff-home.com

9001916821 (050501)
en