Series 4, Built-in microwave oven, Black
BFL523MB0B





- **AutoPilot 7**: every dish is a perfect success thanks to 7 pre-set automatic programmes.
- **Red LED display control**: easy-to-use thanks to the time functions.
- **Pop-out controls**: Make the front of the oven easy to clean and give it a sleek look.
- **White LCD display control**: easy-to-use thanks to direct access to additional functions, temperature recommendation and temperature indication.
- **Cleaning Assistance**: less cleaning effort thanks to the new cleaning option, which can be especially used for cleaning of light soiling.

Technical Data

Type of micro-wave oven:	MW only
Type of control:	Electronic
Dimensions:	382x594x317 mm
Cavity dimensions:	201 x 308 x 282 mm
Length electrical supply cord:	130.0 cm
Net weight:	15.8 kg
Gross weight:	18.1 kg
EAN code:	4242005039128
Max. microwave power level[1]:	800 W
Connection rating:	1270 W
Fuse protection:	10 A
Voltage:	230-240 V
Frequency:	50 Hz
Plug type:	GB plug
Included accessories:	1 x turntable

4 242005 039128

Included accessories

1 x turntable

Optional accessories

HEZ86D000 Steamer Cooker Accessory for Microwave

[1] Intelligent inverter technology: maximum output power will be regulated to 600 W when used in longer operation

Series 4, Built-in microwave oven, Black
BFL523MB0B

Design

- LED Display, red display
- Side opening door, left hinged
- 25.5 cm Glass turntable
- Cavity inner surface: stainless steel
- Electronic clock timer
- Rotary dial, Retractable control dials, Touch controls, round, Start button
- Touch key operation

Features

- Automatic safety switch off
- Door contact switch
- AutoPilot, 7
- Electronic open button
- LED light
- Integral cooling fan

Programmes/functions

- Maximum microwave power level: 800 W and the following options 180 W, 360 W, 600 W, 800 W, 90 W
- 4 defrost and 3 cooking programmes in microwave function
- 1 memory setting

Accessories

- 1 x turntable

Performance/technical information

- Cavity volume: 20 l
- 130 cm Cable length
- Total connected load electric: 1.27 KW
- Nominal voltage: 230 - 240 V
- Appliance dimension (hxwxd): 382 mm x 594 mm x 317 mm
- Niche dimension (hxwxd): 362 mm - 365 mm x 560 mm - 568 mm x 300 mm
- For installation into a 60 cm wide wall unit, installation in tall housing
- Please refer to the dimensions provided in the installation manual

Series 4, Built-in microwave oven,
Black
BFL523MB0B

Microwave,
corner installation

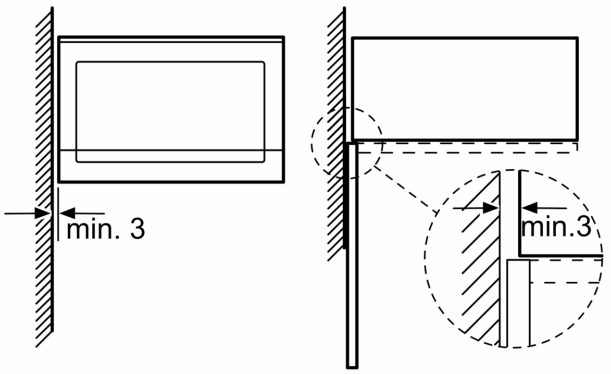

Measurements in mm

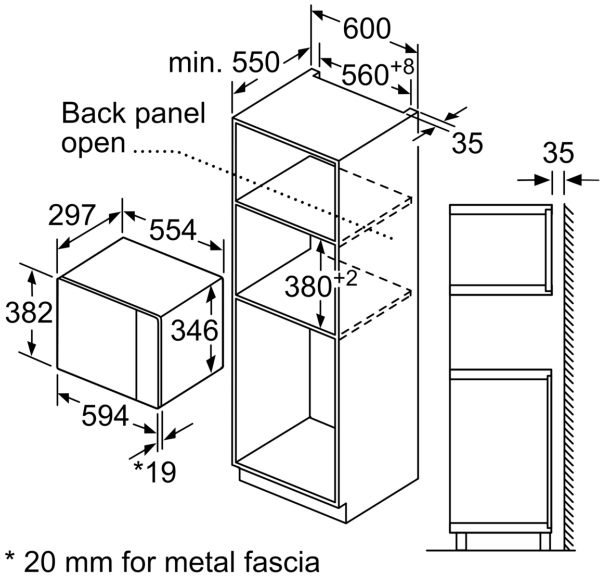

* 20 mm for metal fascia

measurements in mm

Measurements in mm

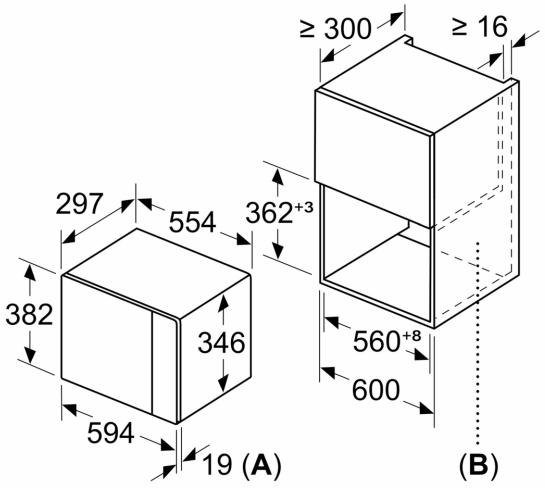

A: 20 mm for metal fascia
B: Back panel open

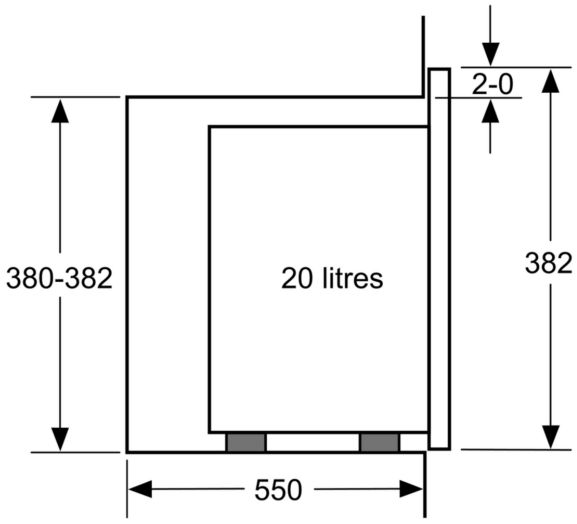

measurements in mm

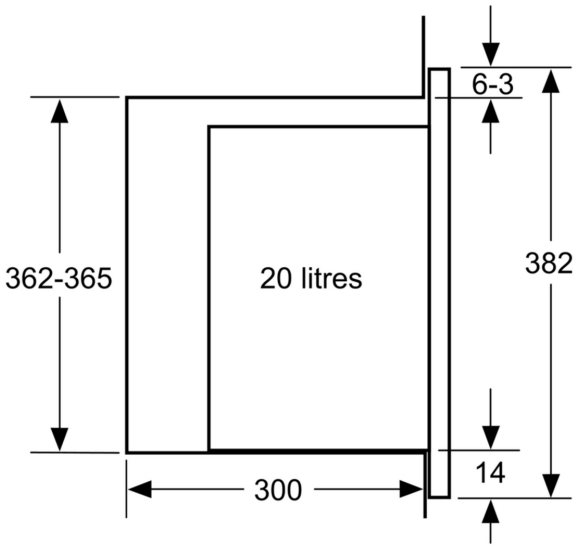

measurements in mm