Series 2, Semi-integrated dishwasher, 60 cm, Brushed steel SMI2HTS06G

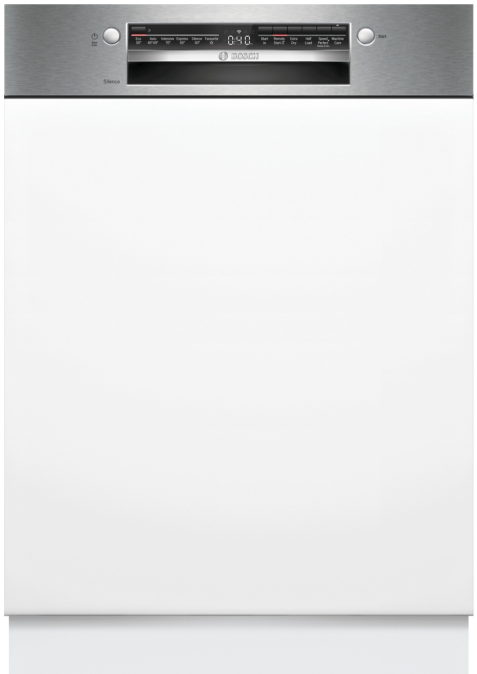

Connected dishwasher with noise reduction at any time via the Home Connect App.

- **Extra Dry**: extra drying option for difficult-to-dry loads.
- **Height Adjustable Top Basket**: offers extra space, especially for tall dishes.
- **Home Connect**: home appliances with smart connectivity for an easier everyday life.
- **Silence Programme**: the quietest way to run your dishwasher.
- **Silence on demand**: up to 30 min noise reduction at any time via the Home Connect App.

Technical Data

Energy Efficiency Class[1]: C
Energy Consumption for 100 cycles Eco Programme[2]: .... 74 kWh/100 cycles
Maximum number of place settings: 13
The water consumption of the eco programme in liters per cycle: 9.0 l
Programme duration[3]: ..... 4:55 h
Airborne acoustical noise emissions : ..... 46 dB(A) re 1pW
Airborne acoustical noise emission class: C
Built-in / Free-standing: ..... Built-in
Height of removable worktop: ..... 0 mm
Required niche size for installation (HxWxD): .... 815-875 x 600 x 550 mm
Depth with open door 90 degree: ..... 1150 mm
Adjustable feet: ..... Yes - all from front
Maximum adjustability feet: ..... 60 mm
Adjustable plinth: ..... Both horizontal and vertical
Net weight: ..... 33.4 kg
Gross weight: ..... 35.2 kg
Connection rating: ..... 2400 W
Fuse protection: ..... 10 A
Voltage: ..... 220-240 V
Frequency: ..... 50; 60 Hz
Length electrical supply cord: ..... 175 cm
Plug type: ..... GB plug
Length inlet hose: ..... 165 cm
Length outlet hose: ..... 190 cm
EAN code: 4242005535309
Installation typology: ..... Semi-integrated

4 242005 535309

Optional accessories

SGZ0BI02	decorative strips stainless steel 81,5cm
SGZ0CL01	door lock mechancial, straight
SGZ1010	inlet and outlet hose extention
SMZ5300	GlassSecure Tray

[1] Scale of Energy Efficiency Classes from A to G
[2] Energy consumption in kWh per 100 cycles (in programme Eco 50 °C)
[3] Duration of programme Eco 50 °C

Series 2, Semi-integrated dishwasher, 60 cm, Brushed steel SMI2HTS06G

Connected dishwasher with noise reduction at any time via the Home Connect App.

- Energy Efficiency Class[1]: C
- Energy[2] / Water[3]: 74 kWh / 9 litres
- Capacity: 13 place settings
- Programme duration[4]: 4:55 (h:min)
- Noise level: 46 dB(A) re 1 pW
- Noise Efficiency Class: C
- Noise level (silence programme): 45 dB(A) re 1 pW

Performance

- 6 programmes: Eco 50 °C, Auto 45-65 °C , Intensive 70 °C, Express 65° , Silence 50 °C , Favourite
- Default favourite programme: Pre-Rinse
- 4 special options: Remote Start, Extra Dry, Half Load, SpeedPerfect+
- Machine Care
- Add-On functions via Home Connect app: Hygiene+, Silence on Demand

Innovations and technology

- Heat exchanger - Hygienic and efficient drying
- AquaSensor III
- DosageAssist detergent dispenser
- EcoSilence BLDC drive
- Self-cleaning filter system with 3 piece corrugated filter
- Stainless steel/Polinox interior

Programmes / functions

- Vario baskets
- Height adjustable top basket when empty
- Low friction wheels on bottom basket
- Rack Stopper to prevent derailing of bottom basket
- 2 foldable plate racks in bottom basket
- Knife rack in top basket
- Cutlery basket in lower rack
- Upper rack cup shelf

Design features

- Home Connect ready on WLAN
- English GB
- Remaining programme time indicator (min)
- Time delay (3, 6 or 24 hours)

Flexible design elements

- AquaStop: Bosch's warranty in case of water damage - for the lifetime of the appliance. Please find warranty terms under https://www.bosch-home.co.uk/customer-service/care-protection-and-parts/additional-warranties
- Tamperproof controls
- AquaMix - Glass protection system
- incl. Steam protection for worktop
- Dimensions (HxWxD): 81.5 x 59.8 x 57.3cm

[1] Scale of Energy Efficiency Classes from A to G

[2] Energy consumption in kWh per 100 cycles (in programme Eco 50 °C)

[3] Water consumption in litres per cycle (in programme Eco 50 °C)

[4] Duration of programme Eco 50 °C

* Please find warranty terms under https://www.siemens-home.bsh-group.com/uk/customer-service/warranty/additional-warranties

Series 2, Semi-integrated dishwasher, 60 cm, Brushed steel
SMI2HTS06G

measurements in mm

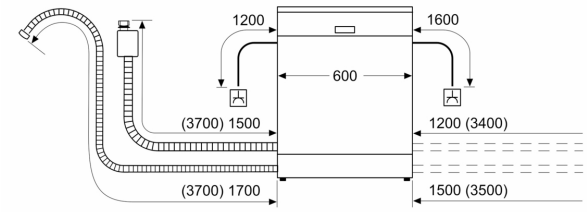
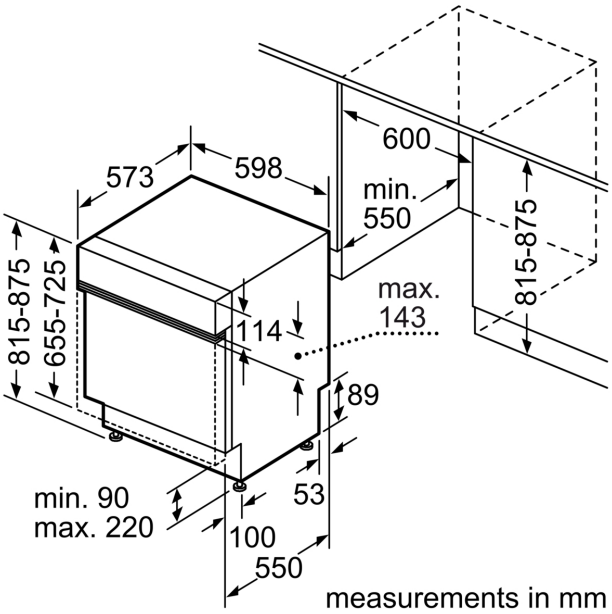
socket
( ) values with extension kit