CVI320XE

Installation	Built-in
Built-In Niche	45 cm
Reference width	Until 60
Reference height	Until 100
Defrost	Automatic
Cooling type	Fan assisted
Hinge type	Standard
Hinge position	Right
Reversible door	Yes

Wine cooler compartment features

Number of fixed shelves	1
Number of removable shelves	2
No. of lights	1
Shelves material	Beech
Removable shelves on telescopic guide rails	Yes
Type of internal light	Led activated with EMOTION system
Air filter	Activated charcoal filter

Programs / Functions

Control setting	Touch control	**Control lock**	Yes
Controls	Internal, in the compartment	**Lighting forced ON**	In a maximum period
Display	LED	**Fan forced ON**	Yes
Functions display	Temperature alarm, Temperature value	**Temperature Alarm**	Yes
Power on lamp	Yes	**Door open alarm**	Yes

Technical Features

Adjustable temperature zones	1	**Number of compressors**	1
		Compressor type	Low vibration compressor

Independent cooling systems	1
Number of door glasses	2
Temperature range	5-20 °C
Type of temperature control	Electronic
Anti-UV door glass	Yes
Integrated heating element	Yes
Refrigerant gas type	R600a
Refrigerant Quantity (gr)	20 g
Foam agent	HFO
Metal panel on the back of the fridge	Metal
Door opening type	With E MOTION electronic opening system

Performance / Energy Label

Max Capacity (bottles 0,75lt)	20
Annual energy consumption	100 kWh/year
Energy efficiency class	F
Airborne acoustical noise emission class	C
Total volume	56 l
Sum of the volumes of the chill compartment(s) and the unfrozen compartment(s)	56 l
Climatic class	SN, N, ST
EEI	124 %
Noise level	37 dB(A) re 1 pW

Electrical Connection

Nominal power	40 W
Current	0.4 A
Voltage (V)	220-240 V
Frequency (Hz)	50 Hz
Power supply cable length	180 cm
Plug	(F;E) Schuko

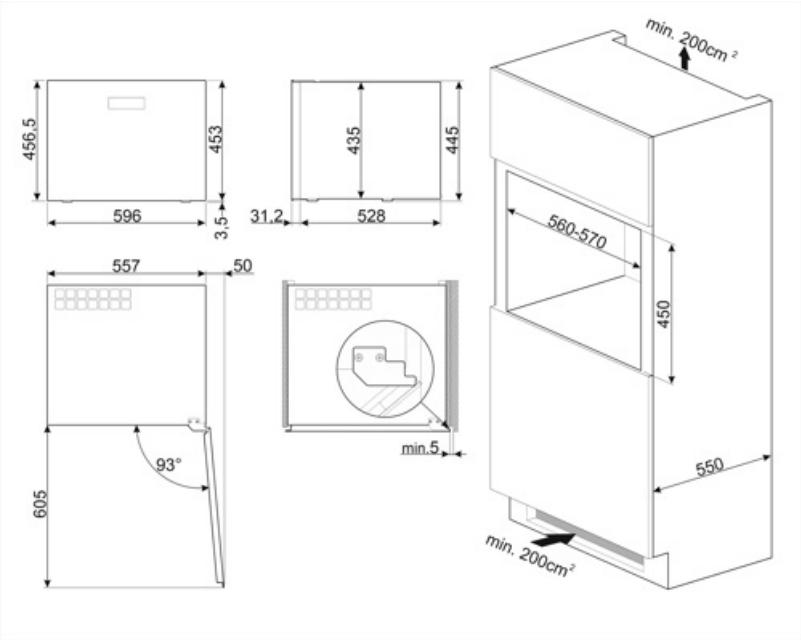

Symbols glossary

The automatic defrost system works by automatically defrosting at regular intervals eliminating the need to defrost altogether.

LED display: to show programmes, functions and options selected and the time to the end of the cycle.

Fingerprint proof stainless steel: Fingerprint proof stainless steel keeps stainless steel looking as good as new.

Built-in niche

Energy efficiency class F

A+: Energy efficiency class A+ helps to save up to 10% energy compared to class A. Maximum performance with minimum consumption is guaranteed.

Ventilated: Forced distribution of cold air in the refrigerator compartment, which allows even temperature distribution within the fridge.

LED interior lighting: is a more energy efficient and long lasting way of illuminating the interior of the appliance.

Touch controls: Easy to use touch controls allow the appliance to be programmed at the touch of a button.

E MOTION opening system: the E MOTION electronic system allows to open the appliance semi-automatically by applying pressure on the door surface.