Series 4, Induction hob, 60 cm, surface mount without frame PUE611BB5E

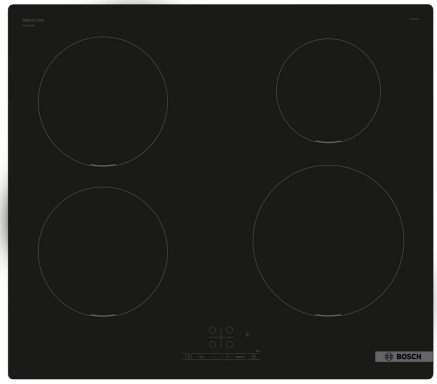



The Induction hob: Faster than gas and ceramic hobs, induction is easier to clean and more energy efficient.

- **TouchSelect**: Selection of the desired cooking zone and easy setting of the desired power level.
- **PowerBoost**: up to 50% more power for faster heating on your induction hob.
- **QuickStart**: start straight away and select the desired cooking level.
- **Restart**: restores cooktop settings in case of an unintentional cooktop switch-off.
- **Timer with switch-off function**: Turns off the assigned cooking zone after the set time.

Optional accessories

HEZ32WA00	Wireless food thermometer
HEZ390090	Wok Set consisting of 3 Items
HEZ9ES100	Espresso maker 4 cups
HEZ9FE280	Iron pan Ø 18 / 28 cm
HEZ9SE030	Set of 2 pots and 1 pan
HEZ9SE040	4 pieces Set
HEZ9SE060	6 pieces Set

Technical Data

Appliance type: ..... Cooking zone ceramic
Built-in / Free-standing: ..... Built-in
Heating type: ..... Electric hob
Number of cooking zones: 4
Required niche size for installation (HxWxD): 51 x 560-560 x 490-500 mm
Width of the appliance: ..... 592 mm
Dimensions: ..... 51x592x522 mm
Dimensions of the packed product (HxWxD): ..... 130 x 753 x 610 mm
Net weight: ..... 10.5 kg
Gross weight: ..... 11.6 kg
Residual heat indicator: ..... Separate
Location of control panel: ..... Front
Basic surface material: ..... Ceramic glass
Color of surface: ..... Black
Length electrical supply cord: ..... 110.0 cm
EAN code: 4242005285082
Voltage: ..... 220-240 V
Frequency: ..... 50; 60 Hz

4 242005 285082

Series 4, Induction hob, 60 cm, surface mount without frame
PUE611BB5E

The Induction hob: Faster than gas and ceramic hobs, induction is easier to clean and more energy efficient.

Flexibility of cooking zones

- Cooking zone front left: 180 mm, 1.8 KW (max. power 3.1 KW)
- Cooking zone rear left: 180 mm, 1.8 KW (max. power 3.1 KW)
- Cooking zone rear right: 145 mm , 1.4 KW (max power 2.2 KW)
- Cooking zone front right: 210 mm, 2.2 KW (max. power 3.7 KW)

Usage convenience

- TouchSelect: control the power with imprinted +/- touch buttons.
- Variable 17-stage power settings for each zone: precisely adapt the heat with 17 power levels (9 main levels and 8 intermediate levels).
- Switch-off timer: switches off the cooking zone at the end of the time set (e.g. for boiled eggs).
- Count-down timer: an alarm sounds at the end of the time set (e.g. for pasta).

Time saving & efficiency

- PowerBoost function for all zones
- : boil water faster thanks to 50% more energy than at the highest standard level.
- QuickStart function: when switching on, the hob automatically selects the cooking zone with cookware (when placed on a zone whilst the hob is off).
- ReStart function: in case of unintentional switch-off, this feature restores all previous settings by switching on the hob again within 4 seconds.
- Quick Stop: quickly switch off a cooking zone with one longer touch.

Design

- 60 cm: space for 4 pots or pans.
- Frameless design

Safety

- 2 stage residual heat indicator for each zone: indicates which cooking zones are still hot or warm.
- Control panel lock: prevent unintended activation of the hob.
- Main on/off switch: switch off all cooking zones at the touch of a button.
- Automatic safety shut off: for safety reasons, heating stops after a preset time if not used.

Installation

- Dimensions of the product (HxWxD mm): 51 x 592 x 522
- Required niche size for installation (HxWxD mm) : 51 x 560 x (490 - 500)
- Min. worktop thickness: 16 mm
- Connected load: 4.6 KW
- Power management options for 16A, 13A or 10A connection: limit the maximum power if needed (depends on fuse protection of electric installation).
- Power cord: 1.1 m, Cable included

Series 4, Induction hob, 60 cm, surface mount without frame
PUE611BB5E

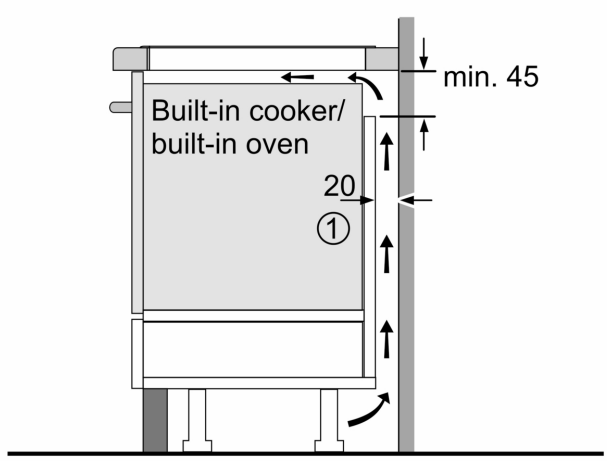

① Ventilation gap must be present

All measurements in mm

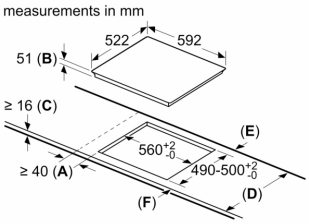

A: Minimum distance from the hob cut-out to the wall.
B: Recessed depth
C: The clearance between the surface of the worktop and the top of the front of the oven must be 30 mm. See space requirements for the oven.

The worktop into which the hob is installed must withstand loads of approx. 60 kg; suitable substructures must be used if required.

D	E	F
585-600	50	≥ 35
> 600	≥ 50	≥ 50

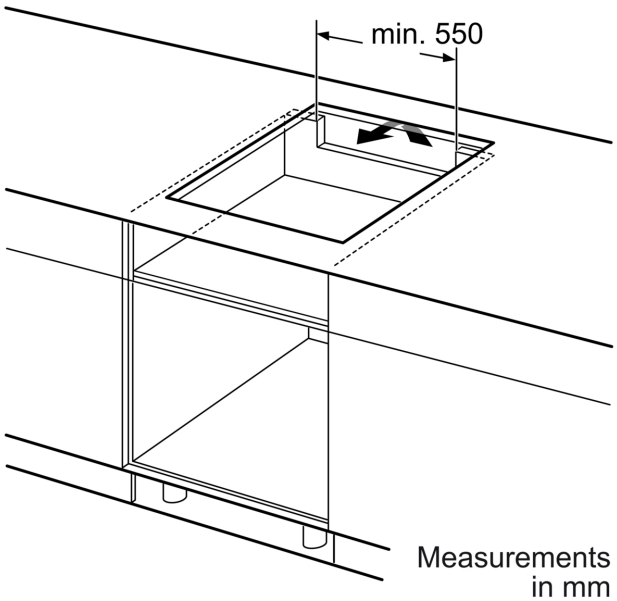

Measurements in mm

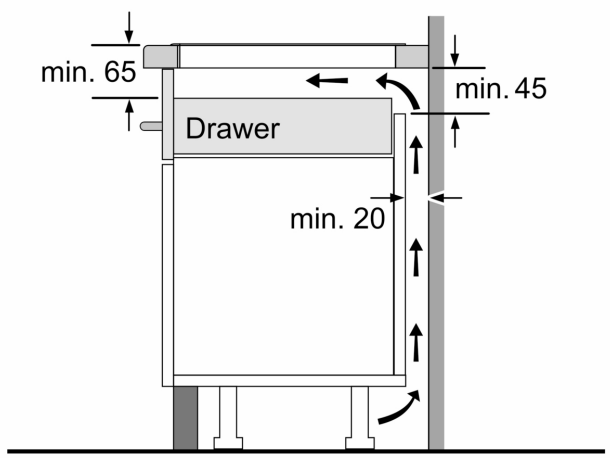

Measurements in mm