N 30, INDUCTION HOB, 60 CM, BLACK, T36CA50X1U

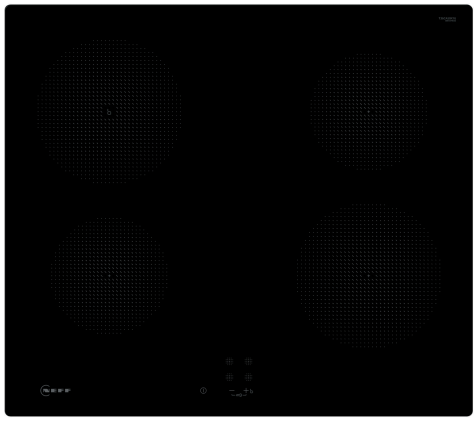

Optional accessories

Z1365WX0	Wireless food thermometer
Z9404SE0	4 pieces Set
Z9406SE0	6 pieces Set
Z9410ES0	Espresso maker 4 cups
Z943SE0	Set of 2 pots and 1 pan

Induction cooktop with TouchControl.

- √ Plug&Play: No electrician needed.
- √ Power Boost – An extra surge of heat when you need fast results.
- √ Induction: heat is generated directly in the cookware for precise cooking that stops instantly when off.

Features

Technical Data

Product name/family: ..... Cooking zone ceramic
Built-in / Free-standing: ..... Built-in
Energy input: ..... Electric
Number of cooking zones: 4
Required niche size for installation (HxWxD): ..... 51 x 560-560 x 490-500 mm
Width of the appliance: ..... 592 mm
Dimensions: ..... 51x592x522 mm
Dimensions of the packed product (HxWxD): . 126 x 753 x 603 mm
Net weight: ..... 9.5 kg
Gross weight: ..... 11.2 kg
Residual heat indicator: ..... Separate
Location of control panel: ..... Front
Basic surface material: ..... Ceramic
Color of surface: ..... Black
Length electrical supply cord: ..... 110.0 cm
EAN code: 4242004258711
Voltage: ..... 220-240 V
Frequency: ..... 50; 60 Hz

4 242004 258711

N 30, INDUCTION HOB, 60 CM, BLACK, T36CA50X1U

Features

- 60 cm: space for 4 pots or pans.

Flexibility of cooking zones

- Cooking zone front left: 145 mm, 1.4 KW
- Cooking zone rear left: 180 mm, 1.8 KW (max. power 3.1 KW)
- Cooking zone rear right: 145 mm , 1.4 KW
- Cooking zone front right: 180 mm, 1.8 KW

Usage convenience

- Touch Control Basic: control the power with imprinted +/- touch buttons.
- Variable 9-stage power settings for each zone: precisely adapt the heat with 9 power levels.

Time saving & efficiency

- PowerBoost function in the front left zone
- : boil water faster thanks to 50% more energy than at the highest standard level.
- Quick-Off: quickly switch off a cooking zone with one longer touch.

Design

- Frameless

Safety

- Control panel lock: prevent unintended activation of the hob.
- Main switch: switch off all cooking zones at the touch of a button.
- Safety cut out facility: for safety reasons, heating stops after a preset time if not used.

Installation

- Dimensions of the product (HxWxD mm): 51 x 592 x 522
- Required niche size for installation (HxWxD mm) : 51 x 560 x (490 - 500)
- Min. worktop thickness: 16 mm
- Connected load: 3.7 KW
- Power cord 1.1 m UK 3 pin plug: plug and play, no electrician required for installation.
- This hob is equipped with a UK 3 pin plug for an easy plug & play installation. The plug limits the maximum power output to 3.7 KW. For higher power output, please select a hob without plug and ensure installation is carried out by a qualified electrician.

N 30, INDUCTION HOB, 60 CM, BLACK, T36CA50X1U

Dimensioned drawings

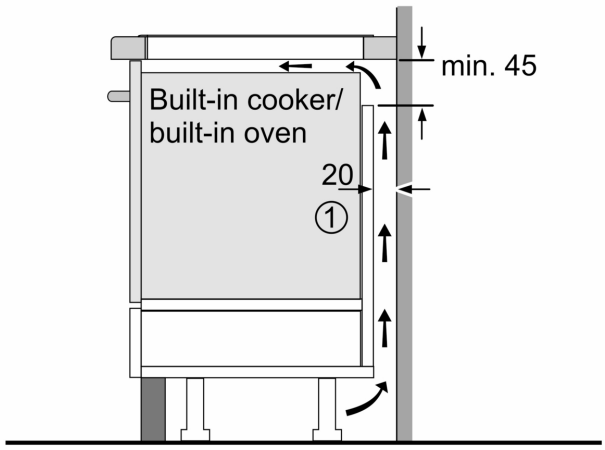

① Ventilation gap must be present

All measurements in mm

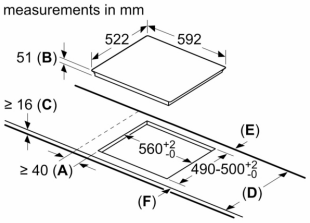

A: Minimum distance from the hob cut-out to the wall.
B: Recessed depth
C: The clearance between the surface of the worktop and the top of the front of the oven must be 30 mm. See space requirements for the oven.

The worktop into which the hob is installed must withstand loads of approx. 60 kg; suitable substructures must be used if required.

D	E	F
585-600	50	≥ 35
> 600	≥ 50	≥ 50

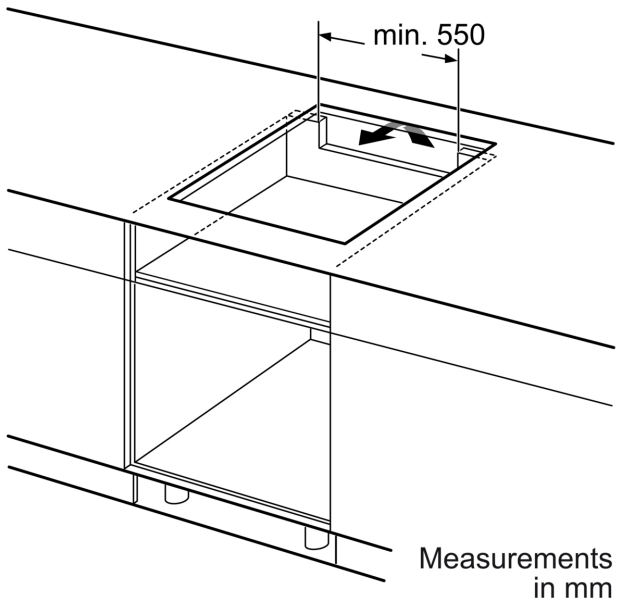

Measurements in mm

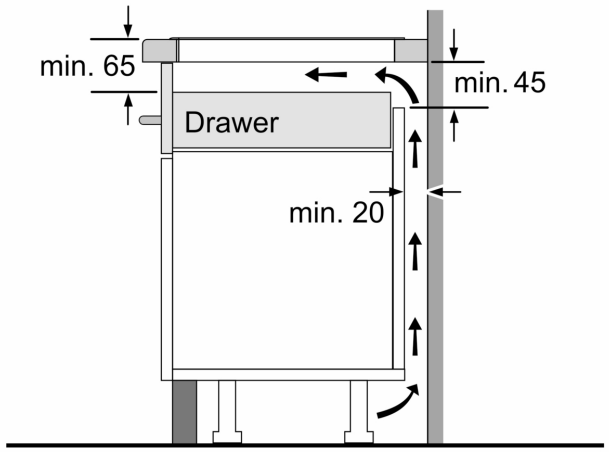

Measurements in mm