C7GPX9

Cooker size	70x60 cm
N. of cavities with energy label	1
Heat source first cavity	Electric
Hob type	Gas
Type of main oven	Thermo-ventilated
Cleaning system main oven	Pyrolytic
EAN code	8017709272616
Energy efficiency class	A



Aesthetics

Aesthetics	Classic	**Controls colour**	Stainless steel
Series	Symphony	**Display**	Touch
Colour	Stainless steel	**Serigraphy colour**	Black
Design	Square design	**Handle**	Smeg Classic
Door	With 2 horizontal strips	**Handle Colour**	Brushed stainless steel
Upstand	Yes	**Glass type**	dark grey
Type of pan stands	Cast Iron	**Feet**	Silver
Hob colour	Stainless steel	**Storage compartment**	Door
Command panel finish	Finger friendly stainless steel	**Logo**	Assembled st/steel
		Logo position	Facia below the oven
Control knobs	Smeg Classic		

Programme / Functions

No. of cooking functions	9

Traditional cooking functions

Static

Fan assisted

Circulaire

Turbo (circulaire + bottom + upper + fan)

ECO

Small grill

Large grill

Fan grill (large)

Fan assisted base

Cleaning functions

Pyrolytic

Hob technical features

UR

Total no. of cook zones 5

Front left - Gas - AUX - 1.00 kW
Rear left - Gas - Semi Rapid - 1.80 kW
Central - Gas - UR - 4.20 kW
Rear right - Gas - Semi Rapid - 1.80 kW
Front right - Gas - AUX - 1.00 kW

Type of gas burners	Standard	**Gas safety valves**	Yes
Automatic electronic ignition	Yes	**Burner caps**	Matt black enamelled

Main Oven Technical Features

No. of lights	1	**Total no. of door glasses**	4
Fan number	1	**No.of thermo-reflective door glasses**	3
Net volume of the cavity	70 litres	**Safety Thermostat**	Yes
Gross volume, 1st cavity	79 l	**Heating suspended when door is opened**	Yes
Cavity material	Easy clean enamel	**Cooling system**	Tangential
Shelf positions	5	**Door Lock During Pyrolisis**	Yes
Type of shelves	Metal racks	**Usable cavity space dimensions (HxWxD)**	360x444x425 mm
Light type	Halogen	**Temperature control**	Electro-mechanical
Light power	40 W	**Lower heating element power**	1200 W
Cooking time setting	Start and Stop	**Upper heating element - Power**	1000 W
Light when oven door is open	Yes		
Door opening	Flap down		
Removable door	Yes		
Full glass inner door	Yes		

Removable inner door	Yes	**Grill elememt**	1700 W
		Large grill - Power	2700 W
		Circular heating element - Power	2000 W
		Grill type	Electric

Options Main Oven

Timer	Yes	**Minimum Temperature**	50 °C
End of cooking acoustic alarm	Yes	**Maximum temperature**	280 °C

Accessories included for Main Oven & Hob

Moka stand	1	**40mm deep tray**	1
Top oven chrome shelf with back stop	2	**Telescopic Guide rails, partial Extraction**	1
Grill mesh	1		

Electrical Connection

Nominal power	3000 W	**Frequency**	50/60 Hz
Current	13 A	**Power supply cable length**	115 cm
Voltage	220-240 V	**Terminal block**	3 poles

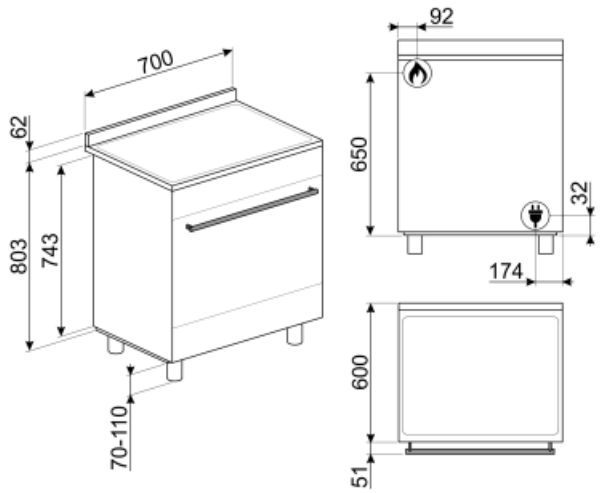

Not included accessories

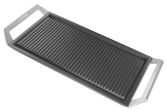

GRIDDLE

Universal griddle for induction, gas, radiant hobs and bbq. Non-stick surface.



GTP

Partially extractable telescopic guides (1 level) Extraction: 300 mm Material: Stainless steel AISI 430 polished



WOKGHU

Cast-Iron WOK Support



KITC7X

Splashback, 70x75 cm, stainless steel, suitable for Symphony cookers



GTT

Totally extractable telescopic guides (1 level) Extraction: 433 mm Material: Stainless steel AISI 430 polished



SFLK1

Child lock



PRTX

Refractary pizza stone with handles. D=35cm Not suitable for microwave ovens. Suitable for gas ovens, to be put on the griddle.



KITPBX

Height reduction feet (850 mm)



KITPAX

Heigh extension feet (950 mm), stainless steel, suitable for Master, Symphony and Concertcookers

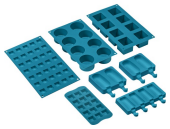

SMOLD

Set of 7 silicone moulds for ice creams, ice lollies, pralines, ice cubes or to portion food. Usable from -60°C to +230°C

Symbols glossary

A: Product drying performance, measured from A+++ to D / G depending on the product family



Air cooling system: to ensure a safe surface temperatures.



Enamel interior: The enamel interior of all Smeg ovens have a special antacid lining which helps keep the interior clean by reducing the amount of cooking grease adhering to it.



Circogas: In gas ovens the fan distributes the heat quickly and evenly throughout the oven cavity, avoiding flavour transfer when cooking a number of different dishes at the same time. In electric ovens this combination completes cooking more quickly of foods that are ready on the surface, but that require more cooking inside, without further browning.



Upper and lower element only: a traditional cooking method best suited for single items located in the centre of the oven. the top pf the oven will always be hottest. Ideal for roast, fruit cakes, bread etc.



ECO: The combination of the grill, fan and lower element is particularly suitable for cooking small quantities of food.



Half grill: For rapid cooking and browning of foods. Best results can be obtained by using the top shelf for small items, the lower shelves for larger ones, such as chops or sausages. For half grill heat is generated only at the centre of the element, so is ideal for smaller quantities.



Circulaire with upper and lower elements: The use of the fan with both elements allows food to be cooked quickly and effectively, ideal for large joints that require thorough cooking. It offers a similar result to rotisserie, moving the heat around the food, instead of moving the food itself, enabling any size or shape to be cooked.



The inner door glass: can be removed with a few quick movements for cleaning.



Heavy duty cast iron pan stands: for maximum stability and strength.



Quadruple glazed: Number of glazed doors.



Fingerprint proof stainless steel: Fingerprint proof stainless steel keeps stainless steel looking as good as new.



Fan with upper and lower elements: The elements combined with the fan aim to provide more uniform heat, a similar method to conventional cooking, so pre-heat is required. Most suitable for items requiring slow cooking methods.



Circulaire: The combination of the fan and circular element around it gives a hot air cooking method. This provides many benefits including no preheat if cook time is more than 20 minutes, no flavour transfer when cooking different foods at the same time, less energy, and shorter cook times. Good for all types of food.



Grill element: Using of grill gives excellent results when cooking meat of medium and small portions, especially when combined with a rotisserie (where possible). Also ideal for cooking sausages and bacon.



Fan with grill element: The fan reduces the fierce heat from the grill, providing an excellent method of grilling various foods, chops, steaks, sausages etc. giving even browning and heat distribution, without drying out the food. The top two levels recommended for use, and the lower part of the oven can be used to keep items warm at the same time, an excellent facility when cooking a grilled breakfast. Half grill (centre portion only) is ideal for small quantities of food.



All glass inner door: All glass inner door, a single flat surface which is simple to keep clean.



Side lights: Two opposing side lights increase visibility inside the oven.

Pyrolitic: Pyrolitic cleaning cycles can be selected as necessary to automatically clean the oven interior.

Telescopic rails: allow you to pull out the dish and check it without having to remove it from the oven entirely.

The capacity indicates the amount of usable space in the oven cavity in litres.

The oven cavity has 5 different cooking levels.

Ultra rapid burners: Powerful ultra rapid burners offer up to 5kw of power.