# DF344BW



| | |
|---|---|
| **Product Family** | Dishwashers |
| **Width** | 60 cm |
| **Commercial height** | 85 cm |
| **Installation** | Free-standing |
| **N° baskets** | 3, FlexiDuo |
| **EAN code** | 8017709307813 |

## Programs / Functions

| | | | |
|---|---|---|---|
| **No. of programmes** | 10+1 | **Auto sensor 45-65** | Yes |
| **Washing temperatures** | 38, 45, 50, 55, 65, 70, 75 °C | **Mix** | Yes |
| **Soak** | Yes | **Quiet (-2 dB)** | Yes |
| **Express 27'** | Yes | **Intense** | Yes |
| **Crystal** | Yes | **Self clean** | Yes |
| **Full express - 60 minutes** | Yes | **Hygiene 99,9%** | Yes |
| **ECO** | Yes | | |

## Options

| | | | |
|---|---|---|---|
| **Dry Assist+ option** | Yes | **1/2 load FlexiZone option (varied distribution)** | Yes |
| **Delay timer option** | Up to 24 hours, with automatic soak | **Special programs option** | Yes |

## Baskets

| | | | |
|---|---|---|---|
| **Basket colour** | Grey | **Largest loadable dish in upper basket** | 19,0 cm |
| **Basket components colour** | Grey | **Lower Basket** | With 4 foldable racks |

| | |
|---|---|
| **Handle** | In plastic on upper and lower basket |
| **Upper Basket** | With 3 foldable racks |
| **Glass holder** | Yes |
| **Height adjustment of the upper basket** | On three levels |
| **Sliding Guides Extra Glide** | Yes |
| **Lower basket with anti-drip inserts** | Yes |
| **Largest loadable dish in lower basket** | 30,0 cm |
| **Colour Inner Components** | Blue |
| **Cutlery basket** | Yes |

## Technical Features



| | |
|---|---|
| **Width (mm)** | 598 mm |
| **Depth (mm)** | 600 mm |
| **Display type** | 3 digit |
| **Product Height (mm)** | 848 mm |
| **Controls** | Electronic |
| **Display** | Delayed start, Programme time indicator, Time to end indication |
| **Programme graphics** | Symbols and printed key |
| **On/off indicator** | Yes |
| **Salt light indicator** | Light |
| **Rinse aid indicator** | Light |
| **Progress indicator** | Yes |
| **End of cycle indicator** | On display, with acoustic signal |
| **Washing system** | Planetarium |
| **Third spray arm** | Single |
| **Water softener** | With electronic setting |
| **Turbidity sensor Aquatest** | Yes |
| **Flood protection system** | Total Acquastop |
| **Water supply** | Single; cold/hot water max. 60°C - energysave with hot water up to 35% |
| **Max water hardness** | 100°fH;58°dH |
| **Drying system** | Natural condenser drying, with Dry Assist + automatic door opening system at the end of the cycle |
| **Steam protection** | In plastic |
| **Tank material** | Stainless steel |
| **Filter** | Stainless steel |
| **Concealed heating element** | Yes |
| **Hinges** | Self balancing with fixed hinges |
| **Adjustable feet** | Just for levelling |
| **Back cover** | Yes, with covered counterweight |
| **Depth of dishwasher with open door (mm)** | 1168 |
| **Removable top** | Yes, with optional KIT |

## Performance / Energy Label NEW




| | |
|---|---|
| **Energy Efficiency Class (Washing cycle)** | B |
| **Energy consumption [per 100 cycles, based on the eco programme]** | 63 KWh |
| **Rated capacity (ps)** | 13 |
| **Water consumption [per cycle]** | 9.0 litres |
| **Programme duration** | 4:25 h:min |
| **Airborne acoustical noise emissions (spinning phase)** | 44 dB(A) re 1 pW |
| **Airborne acoustical noise emission class** | B |
| **Energy efficiency Index (EEI) (Washing cycle)** | 37.9 |

## Electrical Connection

| | | | |
|---|---|---|---|
| **Plug** | (G) UK e Singapore | **Frequency (Hz)** | 50 Hz |
| **Connected power** | 1800 W | **Type of connection** | Single-phase |
| **Current** | 13 A | **Power supply cable length** | 140 cm |
| **Voltage** | 220-240 V | | |

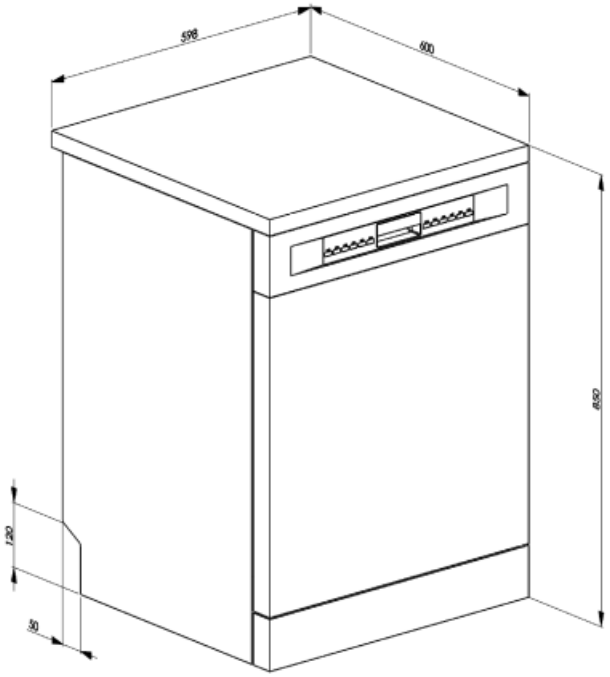

## Not included accessories

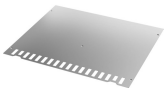

**KITINC**

a steel bar fitted on the top will block the dishwasher at the top.

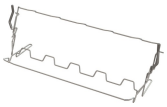

**KITGH**

Kit glass holder. It has to be fitted on the first basket but only if there are foldable racks



**KITPLV2**

Kit extension for dishwasher and washing machine: length mt. 2

## Alternative products



**DF344BX**

# Symbols glossary



Aquatest measures the clarity of the water during an auto program, and automatically ensures the minimum consumption of water and energy.



Delay Timer: The delay timer can postpone the start of the program by up to 24 hours.



FlexiZone: The ½ load flexizone allows you to wash a reduced load saving energy, water and time and there are no restrictions on where the items are placed.



Noise Level: Excellent insulation and special devices keep noise to a minimum.



Auto 45°- 65°: The auto programme regulates the length of a cycle depending on the need for a pre-wash and the number of rinses required.



Eco: Eco, this economic wash programme uses a low amount of water and energy in order to provide the most environmentally friendly cleaning option.



Soak programme: The soak programme provides a rinse to prevent dirt from drying.



Ultraclean: The Ultraclean option performs a final rinse at a high temperature of 70°c eliminating virtually all bacteria.



Total Acquastop: In addition to the partial Acquastop protection present in all Smeg dishwashers, some models have an electronic device fitted to the water intake hose, which monitors water levels in the machine, detects leaks in the hose and switches off the water supply immediately when necessary.



...



...



The Dry Assist + option, in addition to saving energy, ensures perfect drying of the dishes by opening the door automatically at the end of the wash c



Anti-drip: Some models of dishwashers are equipped with special polymer nozzles anti-drip, that improve the process of drying.



FlexiDuo: The FlexiDuo 3rd cutlery basket allows you to arrange cutlery or small cups, ladles, or bulky utensils however you like: it consists of two separate and moveable modules.



The new ExtraGlide guide system, available on top of the range models, makes the second basket even smoother and softer. In fact, it facilitates the extraction of the introduction, even at full load and, for the greater excursion, the insertion of crockery is also facilitated in the rear part.



PLANETARIUM_WASHING_SYSTEM_72dpi



Crystals: The Crystals programme is dedicated to delicate dishes such as glasses and china.



Normal programme: The normal programme is suitable for normal degrees of dirt for everyday use.



Rapid 27 Mins: The rapid 27 mins quick program takes just 27 minutes to wash a load.



The symbols show the number of plate settings of the dishwasher.



System WaterSave ensures the best washing results with minimal water consumption depending on the model of dishwasher.



...



...



Energy efficiency class B



HYGIENE 99.9% High-temperature washing programme. The 75° rinse guarantees the removal of 99.9% of germs and bacteria, making it ideal for sanitising