KT110PE

Product family	Hood
Hood Type	Decorative wall hood
Design	Chimney
Extraction	Expulsion
Material	Painted material
Type of steel	Brushed
EAN code	8017709211707
Hood width	110 cm



Aesthetics

Colour	Cream	**Aesthetics**	Victoria
Finishing	Gloss	**Logo**	Applied

Controls

Control setting	Control knobs	**Control knobs**	Victoria
No. of controls	2	**Controls colour**	Steel effect

Programme / Functions

No. of speeds	3
Intensive speed	BOOST

Technical Features

No. of lights	2	**No. of filters**	4
Light type	LED	**Anti-grease filters**	Aluminium
Light power	1 W	**Vent outlet**	150 mm
Light color temperature scale (°K)	3000 °K	**Minimum distance from GAS hob**	750 mm
Free outlet maximum capacity	820 m³/h	**Minimum distance from ELECTRIC hob**	650 mm
Motor power	275 W	**Non return valve**	Yes

	Extraction rate IEC 61591 [m³/h]	Noise level IEC 60704-2-13 [dB(A)]
Speed 1	326	49
Speed 2	439	57
Speed 3	554	63
Intensive speed	784	71

Performance / Energy Label

Annual Efficiency Consumption (AEChood)	57 KWh/year
Energy efficicency class (EEC)	A
Fluid Dynamic Efficiency (FDE)	31.1
Fluid Dynamic Efficiency class (FDEC)	A
Lighting Efficiency (LE)	83.2 lux/W
Lighting Efficiency Class (LEC)	A
Grease Filtering Efficiency (GFE)	69.2 %
Grease Filtering Efficiency Class (GFEC)	D
Air flow at minumum speed (Qmin)	326 m³/h
Maximum extraction rate	554 m³/h
Intensive extraction rate	784 m³/h

Airbourne acouistical A-weighted sound Power Emission at minimum speed (SPEmin)	49 dB(A)
Airborne acoustical A-weighted sound Power Emission at maximum speed (SPEmax)	63 dB(A)
Airbourne acoustical A-weighted sound power emission at boost speed (SPEboost)	71 dB(A)
Energy Efficiency Index per first cavity	52.2
Measured air flow rate at best efficiency point (Qbep)	413 m³/h
Measured air pressure at best efficiency point (Qbep)	456 Pa
Measured electric power input at best efficiency point (Wbep)	168 W
Normal Power of the light system (WI)	2 W
Average illumination of the light on the cooking surface (Emiddle)	183 lux
Sound power level at highest setting (Lwa)	63 dB(A)

Electrical Connection

Nominal power	278 W
Voltage	220-240 V
Frequency (Hz)	50-60 Hz
Power supply cable length	1000 mm

Also available

Alternative colours availible	White, Black, Stainless steel	**Available colours**	KT110BE-KT110BLE - KTR110XE

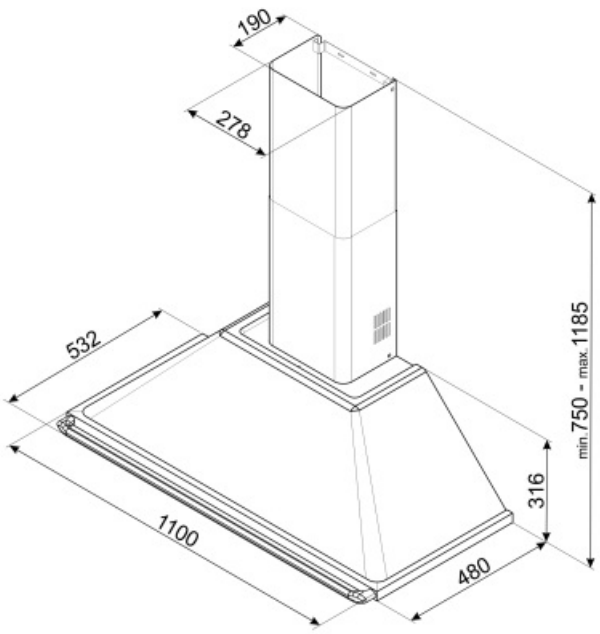

Not included accessories



FLT6

Round Charcoal filters (kit 2 pieces)



KITALLFC

Universal Charcoal filter Stainless Steel AISI 304 The filter can be washed in dishwasher 50 °C (water and suitable detergent) and to dry it put in the oven 180°C 25 minutes

Symbols glossary

A: Product drying performance, measured from A+++ to D / G depending on the product family



Filters: Model has filters to help remove grease from the steam emanating from the pans during cooking.



Lights: All cooker hoods feature lights to illuminate the cooking area or add to the ambience of the kitchen.



Intensive/turbo setting: when extra fast extraction is required.