PGF30F



Product Family	Hob
Built-in	Ultra-low profile
Dimensions	30 cm
Power supply	Electric
EAN code	8017709141721

Aesthetics

Colour	Stainless steel
Finishing	Brushed
Aesthetics	Classic
Material	Stainless Steel
Type of steel	Brushed
Type of control setting	Control knobs
Control knobs position	Front
No. of controls	1
Controls colour	Steel effect

Programme / Functions

Total no. of cook zones	1
No. of electric plate cook zones	1

Options

Standard cut out	494x292 mm

Technical Features

8th zone position	Central	**Automatic switch off when overheat**	Yes
8th zone type	Friggitrice		

Residual heat indicator	Yes

Accessories Included

Other accessories	St/Steel lid

Electrical Connection

Nominal power (W)	2200 W	**Frequency (Hz)**	50/60 Hz
Voltage (V)	220-240 V		

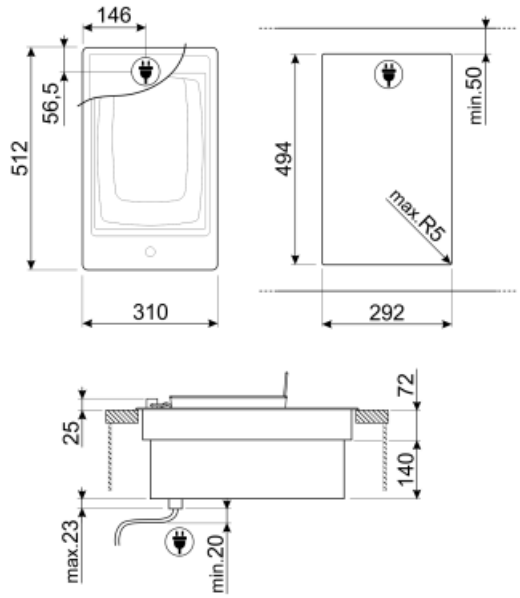

Not included accessories

LGPGF-1

Aluminium connecting strip for PGF

6MP1PGF

6 Linea knobs for PGF hobs



Symbols glossary



Ultra-low profile: Installation of product with flat edge - height of 1 mm.



Overheat protection: The safety system that automatically turns off the hob in case of overheating of the control unit.



Indication of residual heat: After the glass ceramic hob is switched off the residual heat indicator shows which of the heating zones still remains hot. When the temperature drops below 60 ° C, the indicator goes out.



Knobs control