Serie | 2, Fully-integrated dishwasher, 60 cm
SGV2ITX22G







Dishwasher with an option for extra-thoroughly dry dishes with just one push of a button.

- **ExtraDry:** extra drying option for difficult-to-dry loads.
- **Auto Programmes:** automatically selects the best cleaning performance programme.
- **Height Adjustable Top Basket:** offers extra space, especially for tall dishes.
- **InfoLight:** a red infolight on the floor indicates whether the dishwasher is switched on or off.
- **AquaStop:** lifetime warranty for water damages guaranteed.

Technical Data

Energy Efficiency Class (Regulation (EU) 2017/1369):	E
Energy Consumption for 100 cycles Eco Programme (EU 2017/1369):	92
Maximum number of place settings (EU 2017/1369):	12
The water consumption of the eco programme in liters per cycle (EU 2017/1369):	10.5
Programme duration (EU 2017/1369):	4:30
Airborne acoustical noise emissions (EU 2017/1369):	48
Airborne acoustical noise emission class (EU 2017/1369):	C
Construction type:	Built-in
Height of removable worktop (mm):	0
Dimensions of the product (HxWxD):	815 x 598 x 550
Required niche size for installation (HxWxD):	815-875 x 600 x 550
Approval certificates:	CE, VDE
Depth with open door 90 degree (mm):	1150
Adjustable feet:	Yes - all from front
Maximum adjustability feet (mm):	60
Adjustable plinth:	both horizontal and vertical
Net weight (kg):	30.990
Gross weight (kg):	33.3
Connection rating (W):	2400
Current (A):	10
Voltage (V):	220-240
Frequency (Hz):	50; 60
Length of electrical supply cord (cm):	175
Plug type:	GB plug
Length inlet hose (cm):	165
Length outlet hose (cm):	190
EAN code:	4242005324316
Installation type:	Full-integrated

Optional accessories

SGZ1010 : inlet and outlet hose extention
SMZ5003 : Retractable hinge f. high corpus dimens.
SMZ5006 : decorative strips 81cm st.steel
SMZ5300 : GlassSecure Tray

Serie | 2, Fully-integrated dishwasher, 60 cm SGV2ITX22G

Dishwasher with an option for extra-thoroughly dry dishes with just one push of a button.

New for 2021

Performance

- Energy Efficiency Class[1]: E
- Energy[2] / Water[3]: 92 kWh / 10.5 litres
- Capacity: 12 place settings
- Programme duration[4]: 4:30 (h:min)
- Noise level: 48 dB(A) re 1 pW
- Noise Efficiency Class: C

Programmes / functions

- 4 programmes: Eco 50 °C, Auto 45-65 °C, Intensive 70 °C, Express 65°
- 3 special options: Extra Dry, Half Load, SpeedPerfect
- Machine Care

Flexible design elements

- Vario baskets
- Height adjustable top basket when empty
- Low friction wheels on bottom basket
- Rack Stopper to prevent derailing of bottom basket
- 2 foldable plate racks in bottom basket
- Cutlery basket in lower rack

Innovations and technology

- DosageAssist detergent dispenser
- EcoSilence BLDC drive
- Automatic detergent detection
- Aqua and loading sensor
- AquaMix - Glass protection system

Design features

- Push button top edge controls
- InfoLight (Red) - Light projection on the floor
- Time delay (3, 6 or 9 hours)
- AquaStop: Bosch warranty in case of water damage - for the lifetime of the appliance. Please find warranty terms under https://www.bosch-home.co.uk/customer-service/care-protection-and-parts/additional-warranties
- Self cleaning filter system with 3 piece corrugated filter
- Large item spray head, steam protection plate
- Stainless steel/Polinox interior
- Dimensions (HxWxD): 81.5 x 59.8 x 55cm

[1] *Scale of Energy Efficiency Classes from A to G*

[2] *Energy consumption in kWh per 100 cycles (in programme Eco 50 °C)*

[3] *Water consumption in litres per cycle (in programme Eco 50 °C)*

[4] *Duration of programme Eco 50 °C*

Serie | 2, Fully-integrated dishwasher, 60 cm
SGV2ITX22G

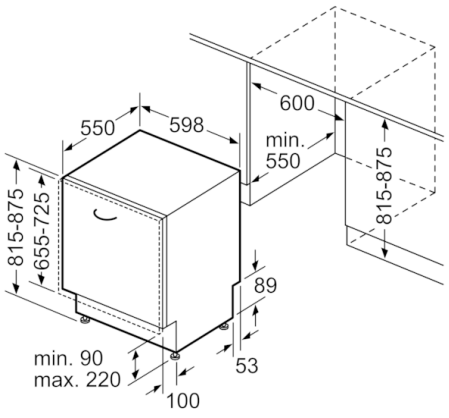

measurements in mm

