TR62BL

Cooker size	60x60 cm
N. of cavities with energy label	2
Heat source first cavity	Electric
Hob type	Gas
Type of main oven	Thermo-ventilated
Type of second oven	Static
EAN code	8017709210625
Energy efficiency class	A
Energy efficiency class, second cavity	A



Aesthetics

Aesthetics	Victoria	**Display**	electronic 5 buttons
Colour	Black	**Colour of buttons**	Black
Design	Victoria	**No. of controls**	6
Door	With frame	**Serigraphy colour**	Silver
Upstand	Yes	**Handle**	Smeg Victoria
Type of pan stands	Cast Iron	**Handle Colour**	Brushed stainless steel
Hob colour	Black enamel	**Glass type**	Black
Command panel finish	Enamelled metal	**Plinth**	Anthracite
Control knobs	Smeg Victoria	**Logo**	assembled 50's
Controls colour	Stainless steel	**Logo position**	Upstand

Programme / Functions

No. of cooking functions 4

Traditional cooking functions

Static

Small grill

Large grill

Base

Hob technical features

UR

Total no. of cook zones 4

Front left - Gas - 2UR (dual) - 4.20 kW
Rear left - Gas - Semi Rapid - 1.80 kW
Rear right - Gas - Semi Rapid - 1.80 kW
Front right - Gas - AUX - 1.00 kW

Type of gas burners	Standard	**Gas safety valves**	Yes
Automatic electronic ignition	Yes	**Burner caps**	Matt black enamelled

Main Oven Technical Features



No. of lights	1	**Full glass inner door**	Yes
Net volume of the cavity	61 litres	**Removable inner door**	Yes
Gross volume, 1st cavity	70 l	**Total no. of door glasses**	2
Cavity material	Easy clean enamel	**No.of thermo-reflective door glasses**	1
Shelf positions	4	**Safety Thermostat**	Yes
Type of shelves	Metal racks	**Cooling system**	Tangential
Light type	Halogen	**Usable cavity space dimensions (HxWxD)**	316x444x425 mm
Light power	40 W	**Temperature control**	Electro-mechanical
Cooking time setting	Start and Stop	**Circular heating element - Power**	2700 W
Removable door	Yes		

Options Main Oven

Timer	Yes	**Minimum Temperature**	50 °C
End of cooking acoustic alarm	Yes	**Maximum temperature**	245 °C

Second Oven Technical Features



Net volume of the second cavity	35 litres	**No. thermo-reflective door glasses**	1
Gross volume, 2nd cavity	41 l	**Safety Thermostat**	Yes
Cavity material	Easy clean enamel	**Cooling system**	Tangential
Shelf positions	2	**Usable cavity space dimensions (HxWxD)**	169x440x443 mm
Type of shelves	Metal racks	**Temperature control**	Electro-mechanical
No. of lights	1	**Lower heating element - power**	1200 W
Light type	Halogen	**Upper heating element - Power**	1000 W
Light power	40 W	**Grill element - power**	1700 W
Removable door	Yes	**Large grill - Power**	2700 W
Full glass inner door	Yes	**Grill type**	Electric
Removable inner door	Yes	**Tilting grill**	Yes
No. total door glasses	2		

Options Auxiliary Oven

Minimum Temperature	50 °C	**Maximum temperature**	245 °C

Accessories included for Main Oven & Hob

Moka stand	1	**40mm deep tray**	1
Chrome shelf with back stop	2	**Telescopic Guide rails, total Extraction**	1
Grill mesh	1		

Accessories included for Secondary Oven

Chrome shelf with back stop	1	**40mm deep tray**	1
Grill mesh	1		

Electrical Connection

Nominal power	5500 W	**Frequency**	50/60 Hz
Current	24 A	**Power supply cable length**	120 cm
Voltage	220-240 V		
Voltage 2 (V)	380-415 V	**Terminal block**	5 poles

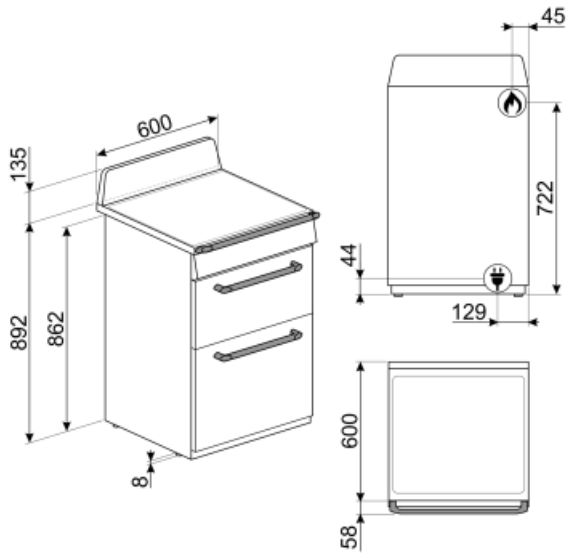

Not included accessories



GT1T-2

Totally extractable telescopic guides (1 level) for ovens with metal frames. Length: 355.5 mm, extraction: 418.5 mm. Material: Stainless steel AISI 430 polished.



PRTX

Refractary pizza stone with handles. D=35cm Not suitable for microwave ovens. Suitable for gas ovens, to be put on the griddle.



PPR2

Refractary pizza stone without handles. Squared shaped stone: L42 x H1,8 x D37,5 cm. Suitable also for gas ovens, to be put on the griddle.



PALPZ

Pizza shovel with fold away handle width: 315mm length : 325mm



GTP

Partially extractable telescopic guides (1 level) Extraction: 300 mm Material: Stainless steel AISI 430 polished



WOKGHU

Cast-Iron WOK Support



GT1P-2

Partially extractable telescopic guides (1 level) for ovens with metal frames. Length: 355.5 mm, extraction: 285 mm. Material: Stainless steel AISI 430 polished.



KITP60X9

Splashback, 90 cm, stainless steel, suitable for pyrolytic Concert cookers



GTT

Totally extractable telescopic guides (1 level) Extraction: 433 mm Material: Stainless steel AISI 430 polished

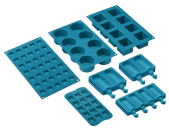

SMOLD

Set of 7 silicone moulds for ice creams, ice lollies, pralines, ice cubes or to portion food. Usable from -60°C to +230°C

Symbols glossary

A: Product drying performance, measured from A+++ to D / G depending on the product family



Air cooling system: to ensure a safe surface temperatures.



Enamel interior: The enamel interior of all Smeg ovens have a special antacid lining which helps keep the interior clean by reducing the amount of cooking grease adhering to it.



Lower heating element only: This function is ideal for foods that require extra base temperature without browning, e.g. pastry dishes, pizza. Also suitable for slow cooking of stews and casseroles.



Half grill: For rapid cooking and browning of foods. Best results can be obtained by using the top shelf for small items, the lower shelves for larger ones, such as chops or sausages. For half grill heat is generated only at the centre of the element, so is ideal for smaller quantities.



The inner door glass: can be removed with a few quick movements for cleaning.



The oven cavity has 2 different cooking levels.



Telescopic rails: allow you to pull out the dish and check it without having to remove it from the oven entirely.



Tilting grill: the tilting grill can be easily unhooked to move the heating element and clean the roof of the appliance in one simple step.



The capacity indicates the amount of usable space in the oven cavity in litres.



Heavy duty cast iron pan stands: for maximum stability and strength.



Double glazed doors: Number of glazed doors.



Upper and lower element only: a traditional cooking method best suited for single items located in the centre of the oven. the top pf the oven will always be hottest. Ideal for roast, fruit cakes, bread etc.



Grill element: Using of grill gives excellent results when cooking meat of medium and small portions, especially when combined with a rotisserie (where possible). Also ideal for cooking sausages and bacon.



All glass inner door: All glass inner door, a single flat surface which is simple to keep clean.



Side lights: Two opposing side lights increase visibility inside the oven.



The oven cavity has 4 different cooking levels.



Electronic control: Allows you to maintain temperature inside the oven with the precision 2-3 ° C. This enables to cook meals that are very sensitive to temperature changes, such as cakes, souffles, puddings.



Ultra rapid burners: Powerful ultra rapid burners offer up to 5kw of power.



The capacity indicates the amount of usable space in the oven cavity in litres.